LONGER

Baoding Longer Precision Pump Co., Ltd.

Add: 3rd/4th Floor, Building 6B, University Science Park
Baoding National, High - Tech Industrial Development Zone
Baoding, Hebei, China 071051
Tel: 86 - 312 - 3110087 3138553
Fax: 86 - 312 - 3168553
E - mail: longer@longerpump.com
Http://www.longerpump.com

GD Series Peristaltic Pumps

2026.5

LONGER®
PRECISION FLUID TRANSFER

GD Series General Distribution Peristaltic Pump Operation Manual



Baoding Longer Precision Pump Co.,Ltd.

A **Halma** company

Contents

Contents ····· 1
1 .General Statement ····· 4
1.1 Declaration ····· 4
1.2 Usage and Safety ····· 4
1.3 Warranty and After-sales Service Commitment ····· 5
1.3.1 Warranty Commitment ····· 5
1.3.2 Maintenance Commitment ····· 6
1.3.3 Dispute Solution ····· 6
1.3.4 Notice of Product Return ····· 6
2. Product Overview ····· 6
2.1 Product Application ····· 6
2.2 Product Key Features ····· 7
2.3 Unpack Check ····· 8
2.4 Driver Structure and Dimensions ····· 9
2.5 Compatible Pump Head, Tubing, and Flow Rate ····· 10
2.6 Technical Specifications ····· 11
3. Pump Head Installation ····· 12
3.1 Installation of YZ Pump Head ····· 12
3.2 Installation of KZ25 Pump Head ····· 13
3.3 Installation of FG Series Pump Head ····· 14
3.4 Installation of DG Series Pump Head ····· 14
3.5 Installation of PFH01 Series Pump Head ····· 15
3.6 Installation of PFH02 Series Pump Head ····· 16
3.7 Installation of DG15 Series Pump Head ····· 17
3.8 Installation of DMD15 Series Pump Head ····· 18
3.9 Tubing Installation ····· 21
4. Interface and Installation/Wiring Instruction ····· 21
4.1 The Definition of Rear Panel ····· 21
4.2 Pin Definition of Communication and Signal Interface (Port F4) ····· 23
5. Handheld Dispenser Accessory Selection and Use ····· 24

5.1 Key Features ····· 24
5.2 Key Performance Indicators ····· 24
5.3 Installation ····· 24
5.4 Tubing and Filling Needle Installation ····· 25
6. Operation Instruction ····· 26
6.1 Icon Description ····· 26
6.2 Operation Panel Explanation ····· 27
6.2.1 Membrane Description ····· 27
6.2.2 Menu Navigation ····· 28
6.2.3 Function Module Layout on Running Screen ····· 30
6.3 Pump Head/Tubing Configuration ····· 31
6.4 Running Screen - Work Mode Description ····· 32
6.4.1 Continuous Mode (Blue Theme) ····· 32
6.4.2 Time Mode (Purple Theme) ····· 39
6.4.3 Volume Mode (Orange Theme) ····· 40
6.5 Control Mode Settings ····· 44
6.5.1 Local Mode ····· 44
6.5.2 External Control Mode ····· 45
6.5.3 Communication Settings ····· 46
6.6 System Settings ····· 47
6.6.1 Access Management ····· 48
6.6.2 External Control Settings ····· 49
6.6.3 Communication Settings ····· 50
6.6.4 Foot Switch Settings ····· 50
6.6.5 Alarm Sound Settings ····· 50
6.6.6 Voice Control Settings ····· 51
6.6.7 Flow Sensor ····· 53
6.6.8 Screen Brightness Settings ····· 60
6.6.9 Firmware Upgrading Settings ····· 60
6.6.10 Reset to Factory Defaults ····· 61
6.6.11 Log Settings ····· 62
6.6.12 Time Settings ····· 63

6.6.13 Power-On State Settings ····· 63
6.6.14Filling Speed Settings ····· 64
6.7 Anti-drip Angle Settings ····· 64
6.8 Screen Lock Setting ····· 65
7. Modbus Register Address ····· 66
7.1 Register Address ····· 66
7.2 Run Parameters ····· 73
7.3 Unit register conversion table ····· 77
7.4 Pump head & tubing index ····· 80
7.4.1 Pump head index ····· 80
7.4.2 Tubing index ····· 81
8. Common Error Messages and Handling ····· 84
9. Default Parameters ····· 84
10. Precautions ····· 87
10.1 Operating Environment ····· 87
10.2 Equipment Wiping ····· 87
10.3 Emergency Replacement of Accessories ····· 88

1. General Statement

1.1 Declaration

- Longer Pump Corporation adheres to the strategy of continuous product improvement. During the process of continuous improvement, we reserve the right to make upgrades, changes, or discontinue products without prior notice.
- Longer Pump Corporation reserves the right to change the specifications and materials contained herein without prior notice.
- Screenshots in this manual may differ from the final product for the difference in model and program version.
- The pump and pump head shown in diagrams may differ from the final product, please refer to the final product.

1.2 Usage and Safety

Please read this user manual carefully before using the pump. Please strictly follow the safety precautions in this manual when using this series of products.

- Please provide necessary safety training to operators.
- Please use this device within the specified environmental conditions.
- When using this product, ensure there are no obstructions within 5 cm around the product. Reasonably fix the inlet and outlet of the pump head tubing.
- This product can't be used as a floor-standing product.
- Please use a power socket with a ground wire.
- Tubing rupture may cause fluid spray. Please replace it immediately or use appropriate protective measures to ensure the safety of the operator.
- When disassembling or assembling the tubing, disconnect the device from power supply, and drain the medium from the tubing completely to ensure there is no pressure in the pipeline system.
- Please disconnect the power supply when connecting control cables.
- During pump operation, operators are prohibited from touching rotating couplings, opening pump head pressure blocks, or touching rotating rollers. If operators need to replace tubing or inspect the coupling at the front-end of the pump, stop the pump first.

- When the pump is not in operation for a long time, loosen the pressure block which compresses the tubing to avoid tubing deformation from prolonged compression.
- Keep the pump head rollers clean and dry. Otherwise, tubing wear will accelerate, and the service life of the pump head and driver will be shortened.
- Do not lubricate the pump head rollers by yourself. Improper operation may cause tubing slippage or corrode the pump head housing.
- Please make the correct connection for the driver's power cable, the external control communication cable, etc. Do not damage the plugs.
- If the device isn't used in the manner specified by the manufacturer, the protection provided by the device may be damaged.

1.3 Warranty and After-sales Service Commitment

1.3.1 Warranty Commitment

(1). The warranty period of the complete product is three years. The consumables, such as tubing and connectors, are not covered by the warranty.

(2). The following failures or damages are not covered by the free warranty whether in warranty period or not.

- The complete product is out of warranty period.
- Failure or damage caused by improper installation, storage, maintenance or usage when user did not follow instructions in user manual.
- Exceeding conditions which are previously agreed in the contract or technical agreement.
- Failure or damage caused by installation, repair, modification or disassembly which is not implemented by Longer Pump service organization or personnel.
- Failure or damage caused by the usage of non-original parts or the replacement of spare parts by users, and the spare parts which are not purchased from Longer Pump or its designated dealers.
- Failure or damage caused by unexpected factors or human factors, including improper voltage input, corrosion, falling, etc.

- Failure or damage caused by force majeure like natural disasters, such as earthquake, fire, etc.
- Failure or damage caused by non-design, non-manufacturing and non-quality problems.

1.3.2 Maintenance Commitment

- When the warranty expired, maintenance and spare parts replacement will be charged by cost.
- Spare parts replacement will be completed within 3 working days; users will be informed of estimated completion date if maintenance may be delayed.

1.3.3 Dispute Solution

Any dispute arising from product quality and service shall be settled according to the contract or agreement. If there is neither contract nor agreement, both parties may settle it through negotiation, otherwise it shall be handled in accordance with relevant national laws and regulations.

1.3.4 Notice of Product Return

If customer needs to return the product for repair, please contact our company or authorized dealers in advance, provide the serial number of the product, and leave contact information and malfunction symptoms. If the product has been exposed to toxic chemicals or other substances harmful to human health, please clean the product before returning it. Products should be properly packed with original packaging, or packaging meeting standards no lower than the original one, to prevent pump from damage during transportation.

2. Product Overview

2.1 Product Application

The peristaltic pump conveys fluids by compressing elastic tubing. Since the fluid only flows inside the tubing and does not contact the pump body, cross-contamination is avoided, giving it a non-contaminating characteristic. Additionally, peristaltic pumps are relatively compact and offer relatively precise metering, making them widely used in general laboratories, light industries, etc.

2.2 Product Key Features

The GD series peristaltic pump is a general-purpose model designed by Longer Pump, using advanced technology specifically for general laboratory and light industrial customers. The key features are as follows:

- Simple and novel appearance, suitable for various applications.
- Controlled via a 5.0-inch capacitive touch screen and four physical buttons, making control simpler and more efficient, with rich and varied display contents.
- Enclosure protection rating IP32, resistant to drips. Meet the needs of general laboratory applications and some light industrial applications.
- Support multiple control modes, including keys, internal control via touchscreen, RS485/Ethernet communication control, remote external control, and voice control.
- Supports flow sensors to display actual flow.
- Automatic flow rate calibration. Can realize real-time calibration with a flow sensor, eliminating the hassle of frequent manual calibration.
- Supports voice control, including voice wake-up, voice start/stop, etc.
- Can stack up as two-tier layout, saving the valuable bench space.
- Can be lifted with one hand for easy movement.
- GD200 has high-torque and medium-torque options to accommodate various pump heads and tubing.
- Lower driver noise. The GD series uses intelligent temperature control technology which activates the fan based on ambient temperature, resulting in extremely low noise at low power.
- Lower operating noise. Through software algorithms, the maximum noise of the entire system during operation does not exceed 50 dB for GD200-1B, 55 dB for GD650-1B, GD400-1B, and GD200-1C.

Series General Distribution Peristaltic Pump, It's divided into domestic and international versions based on the interface language. The domestic version model numbers begin with CF and feature Chinese as the interface language; the international version model numbers begin with GD and feature English as the interface language. The international version additionally includes a language switching function, allowing toggling

between Chinese and English. The specific models and their features are as follows:

Model	Code	Description
GD200-1B	05.02.86A	International，Max Speed 200rpm
CF200-1B	05.02.87A	Domestic，Max Speed 200rpm
GD400-1B	05.02.86B	International，Max Speed 400rpm
CF400-1B	05.02.87B	Domestic，Max Speed 400rpm
GD650-1B	05.02.86C	International，Max Speed 650rpm
CF650-1B	05.02.87C	Domestic，Max Speed 650rpm
GD200-1C	05.02.88A	International，Max Speed 200rpm，Compatible with KZ25 pump head
CF200-1C	05.02.89A	Domestic，Max Speed 200rpm，Compatible with KZ25 pump head

2.3 Unpack Check

Unpack the packing, customer can find user manual, power supply, and handheld dispenser (accessory) on the top layer. If there are any issues, please contact our company or your local dealer.





2.4 Driver Structure and Dimensions

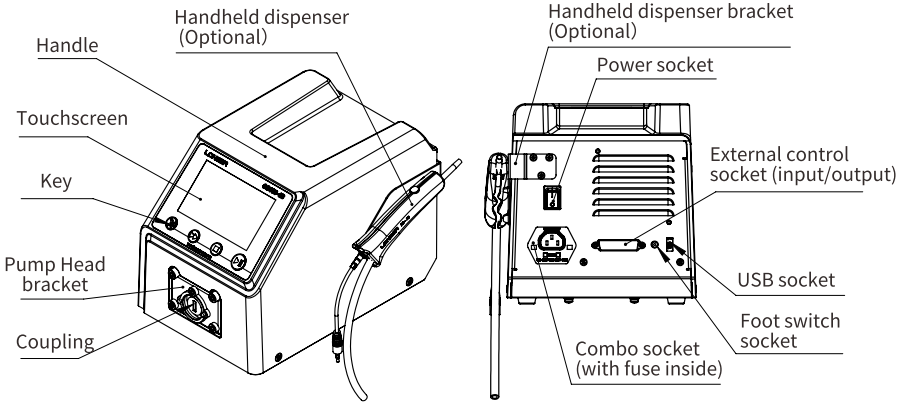

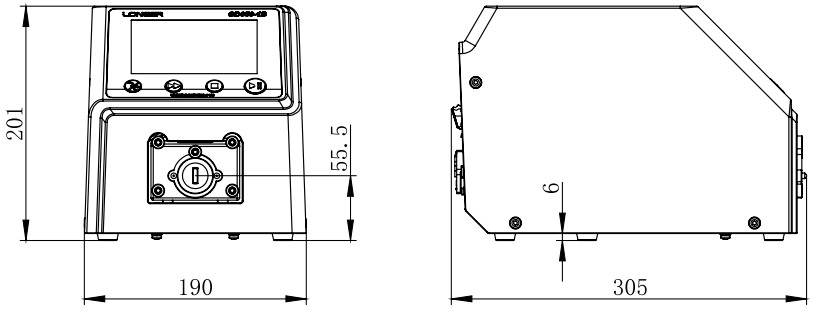

GD external dimension drawing.

2.5 Compatible Pump Head, Tubing, and Flow Rate

Compatible Pump Head	Compatible Tubing / Silicone Tube	Maximum Reference Flow Rate (mL/min)		
		GD650-1B	GD400-1B	GD200-1B GD200-1C
YZ1515X、YZ II 15	13#、14#、19#、16#、25#、17#、18#	2380	1460	730
FG15-13		2600	1600	800
YZ2515X	15#、24#	1730	1060	530
FG25-13		2380	1460	730
YZ II 25	15#、24#、35#、36#	3250	2000	1000
KZ25-13		N/A	N/A	2000
DMD15-13	2×14#、2×19#、2×16#、2×25#	2240	1380	690
PFH01①	inner diameter 0.5-3.2mm Wall thickness 1.6 mm③	159@350rpm	159@350rpm	90
PFH02①	inner diameter 0.6-4.8mm Wall thickness 2.4 mm③	1178@450rpm	1040	520
DG10 Series②	inner diameter < 3.17mm Wall thickness 0.8 – 1mm③	48@100rpm	48@100rpm	48@100rpm
DG15 Series	16#、25#、17#	1950	1200	600
BZ15	14#、16#、25#、17#	1730	1060	530
BZ15	24#	1730	1060	530

Note:

① Due to the maximum speed limit of the pump head, the maximum flow rate is not the flow rate corresponding to the driver's highest speed. To calculate pump head's maximum flow rate, it is based on the displacement listed in the manual multiplied by the speed. It is recommended the maximum speed is 350 rpm for PFH01.

② It is recommended that the maximum speed of 100 rpm for DG series pump heads. Higher speed can severely shorten the life span of the pump head and tubing.

③ Refer to pump head description for details.

④ The table above shows the flow rate for a single pump head or single channel. GD200-1C can drive 1 to 4 units of YZ1515X or YZ II 15 pump head, 1 to 2 units of YZ2515X or YZ II 25 pump head, and 1 to 2 DMD15-13 pump head.

2.6 Technical Specifications

Model	GD200-1B	GD400-1B	GD650-1B	GD200-1C
Speed Range	0.01-200rpm	0.01-400rpm	0.01-650rpm	0.01-200rpm
Speed Resolution	0.01rpm（＜100rpm）;0.1rpm（≥100rpm）			
Control Mode	Internal control (keypad + touchscreen) External and communication control			
Display	5-inch industrial capacitive touchscreen			
External Control	Start/stop control, direction control, speed control (Optional 4-20mA, 0-5V, 0-10V, 0-10kHz), speed signal upper/lower limits configurable, speed range upper/lower limits configurable.			
Communication Interface	RS485			
Communication Protocol	Modbus RTU and Longer OEM Protocol			
Power-off Memory	Configurable to resume operation according to pre-power-off state or stop upon power recycling			
Operation Mode	Continuous mode. Time mode. Volume mode.			
Flow Rate Range	0 to 3250 mL/min			
Run Time Range	0.1 second to 9999 hours			
Single Dispensing Volume Range	0.001uL to 9999L			
Dispensing Count	0 to 999999			
Interval Time	0.1 second to 9999 hours			
Status Output	Speed: Frequency output 10Hz/rpm, OC output. Run status: dry contact, normally open. Running direction: dry contact, normally open. Exception: dry contact, normally open.			
Control Mode	Programmable Start/stop control, direction control, speed control, parameter control. The source of control signals or information can be configured independently.			

Model	GD200-1B	GD400-1B	GD650-1B	GD200-1C
User Access Management	Supports three-level user access management. Total 10 users: 1 administrator, 9 configurable identities (technician or operator). Permission can be enabled and disabled. When enabled, user needs to login via password. When disabled, user and login in directly with administrator account.			
Log Function	The log records start/stop events, parameter modifications, exception events, etc. Logs can be viewed on the local display or on PC host by communication via RS485 interface. The pump can store up to the latest 4000 logs			
Screen Lock	Have screen lock function to prevent maloperation.			
Power-On Running State	Configurable to enable or disable. When enabled, at power on, the pump runs according to the state at last power-off. This function is effective for continuous mode only.			
Full Speed Function	One-touch control for full-speed operation, filling, emptying, etc.			
Power supply	AC100-240V 50/60Hz			
Weight(drive only)	3.5kg			5.5kg
Nominal Input Power	30W	50W	70W	60W

3. Pump Head Installation

3.1 Installation of YZ Pump Head

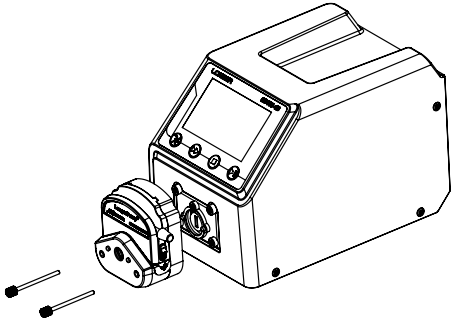

a) Align the flat shaft of the pump head with the flat slot on the drive unit's shaft, then insert the flat shaft into the flat slot.

b) Secure the pump head to the drive unit using two single pump head screws.

c) For other specific operations, please refer to the pump head instruction manual.

3.2 Installation of KZ25 Pump Head

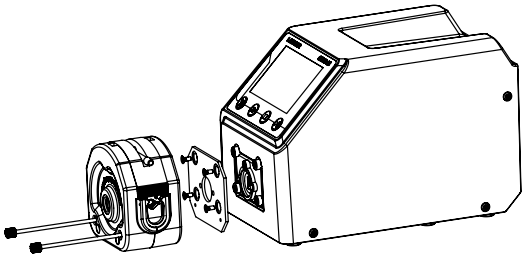

a) Install the adapter plate onto the pump head bracket of the drive unit using four M4 countersunk head screws, as shown in the diagram.

b) Align the flat shaft of the pump head with the flat slot of the drive unit's coupling, then insert the pump head's flat shaft into the coupling slot.

c) Secure the pump head using two pump head screws, as shown in the figure.

d) For other specific operations, please refer to the pump head instruction manual.

3.3 Installation of FG Series Pump Head

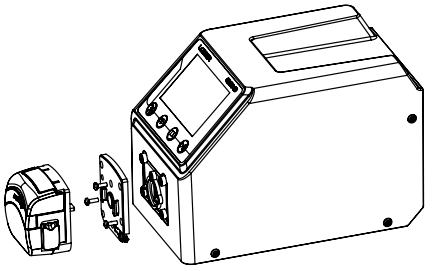

a) Install the pump head mounting plate onto the pump head bracket of the drive unit using three M4 cross recessed pan head screws, as shown in the figure.

b) Insert the flat shaft of the pump head into the flat slot of the drive unit's coupling. Next, rotate the pump head to specific angle so that the groove on the pump head aligns with the protrusion on the mounting plate. Press and then reverse rotate to lock it in place.

c) To remove the pump head, press the transparent lever at the bottom right of the mounting plate, then reverse rotate the pump head to detach it.

d) For other specific operations, please refer to the pump head instruction manual.

3.4 Installation of DG Series Pump Head

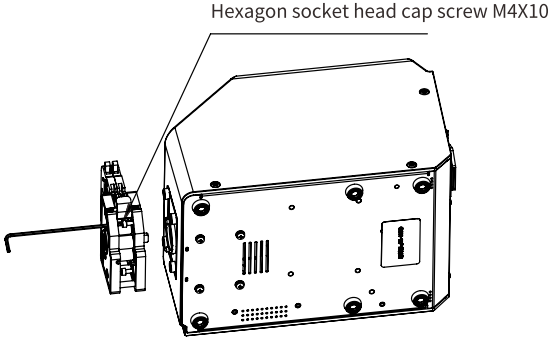

a) Align the flat shaft of the DG pump head with the coupling flat slot on the drive unit, then install the pump head onto the pump head bracket, as shown in the figure.

b) Secure it using two M4 hexagon socket head cap screws, then tighten both screws with a 2.5 mm hex key.

c) The installation of other models of DG series pump heads is similar.

d) For the installation of the pump head card and tubing, please refer to the pump head instruction manual.

3.5 Installation of PFH01 Series Pump Head

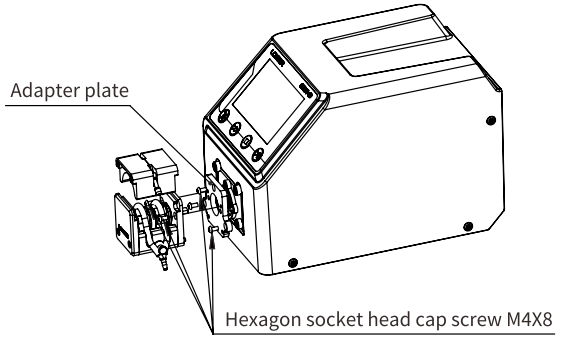

a) Install the PFH01 adapter plate onto the pump head bracket using three M4X8 hexagon socket flat round head screws, as shown in the figure.

b) Align the flat shaft of the pump head with the flat slot on the drive unit, insert and rotate the pump head. Then, install the PFH01 pump head onto the adapter plate using two M4X8 hexagon socket flat round head screws.

c) For other installation details of the pump head, please refer to the pump head instruction manual.

3.6 Installation of PFH02 Series Pump Head

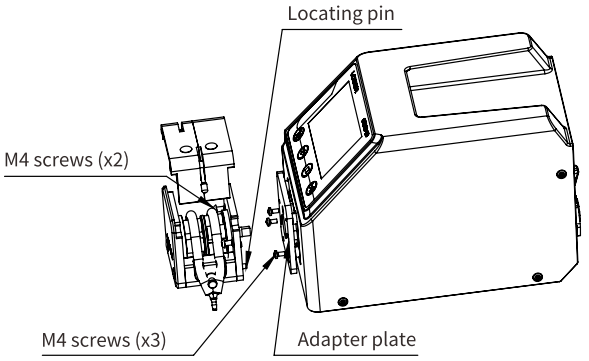

a) Install the adapter plate onto the pump head bracket of the drive unit using two M4x10 screws, as shown in the figure.

b) Align the flat shaft of the pump head with the flat slot on the drive unit's coupling, rotate the pump head, then insert the locating pin into the corresponding hole on the adapter plate.

c) Secure the pump head using two M4 hexagon socket flat round head screws.

d) For other installation or operational details of the pump head, please refer to the pump head instruction manual.

3.7 Installation of DG15 Series Pump Head

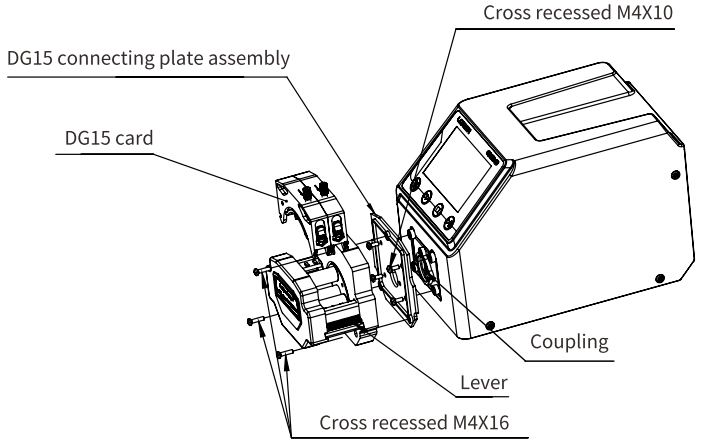

a) Press the lever to remove the two cards from the DG15 pump head, as shown in the figure.
b) Install the DG15 connecting plate assembly onto the pump head bracket of the drive unit using four M4x10 screws.
c) Align the flat shaft of the pump head with the flat slot on the drive unit's coupling, rotate the pump head, and insert the pump head's main shaft into the coupling slot.
d) Secure the pump head using three M4X16 cross recessed screws.
e) For other installation or operational details of the pump head, please refer to the pump head instruction manual.

3.8 Installation of DMD15 Series Pump Head

3.8.1 Installation of DMD15 Series Single Pump Head

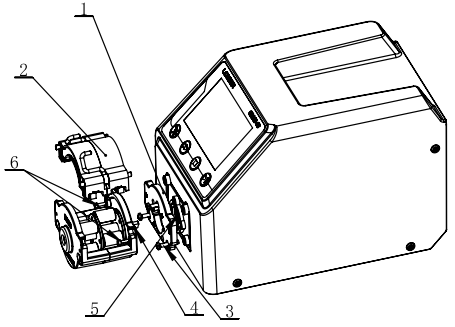

a) Mount the adapter plate (part 1) onto the drive unit's pump head bracket using three M4X12 cross recessed pan head screws.
b) Remove the Pressure Block (part 2)
c) Align the flat shaft (part 4) of the pump head with the flat slot (part 5) on the drive motor. Then, push the pump head inward until it is fully seated.
d) Secure the pump head using the two provided hexagon socket head cap screws M3X10 (part 6).
e) Remount the pressure block (part 2), the installation of single pump head is completed.

3.8.2 GD200-1C With Dual DMD15-13 Pump Head

Step 1: Assemble the intermediate adapter plate.

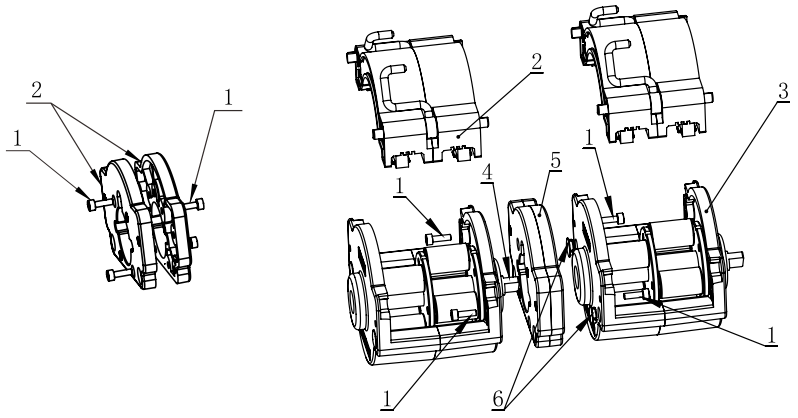

As shown in the diagram above, the components are labeled as follows:

1: Hexagon socket head cap screw M3X10

2: DMD15 connecting plate

The assembly steps are as follows:

a) First, align and join two DMD15 connecting plates (component 2) back-to-back.

b) Then, secure the assembly using a total of four screws (component 1). The method is to use two screws on each side of the assembly.

Step 2: Install the Pump Head and the Intermediate Adapter Plate

a) Remove the protective caps (part 6) if present using a flathead screwdriver.

b) Mount the first pump head (part 3) onto the intermediate adapter plate (part 5).

c) Secure the adapter plate using two M3x10 hexagon socket head cap screws.

d) Align the flat shaft (part 4) of the second pump head with the corresponding flat slot on the roller shaft of the first pump head.

e) Fix the second pump head to the intermediate adapter plate (part 5) using two M3X10 hexagon socket head cap screws

f) Step 2 Completed.

Step 3: Install the Dual Pump Head Assembly onto the Drive Unit

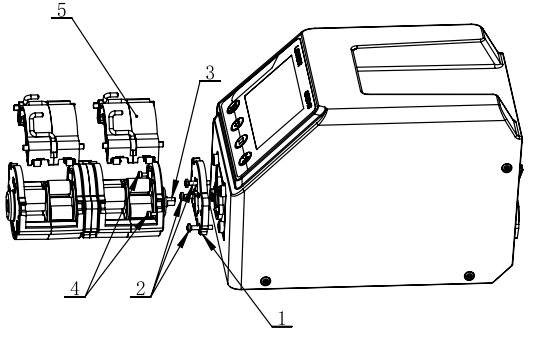

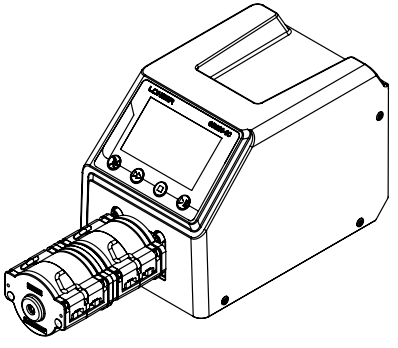

a) Mount the adapter plate (part 1) onto the drive unit's pump head bracket using three M3X12 cross recessed pan head screws.

b) Remove the upper pressure block (part 5) from the dual pump head assembly, then align the flat shaft (part 3) of the pump head with the corresponding slot and push the assembly inward until it is fully seated.

c) Secure the dual pump head to the connecting plate (part 1) using two M3X10 hexagon socket head cap screws.

d) The mounting of dual pump head is completed. For detailed guidance on tubing installation, please refer to the pump head instruction manual.

Note:

The dual DMD15 pump head can be mounted on GD200-1C only.

3.9 Tubing Installation

Refer to the user manual of the corresponding pump head.

4. Interface and Installation/Wiring Instruction

4.1 The Definition of Rear Panel

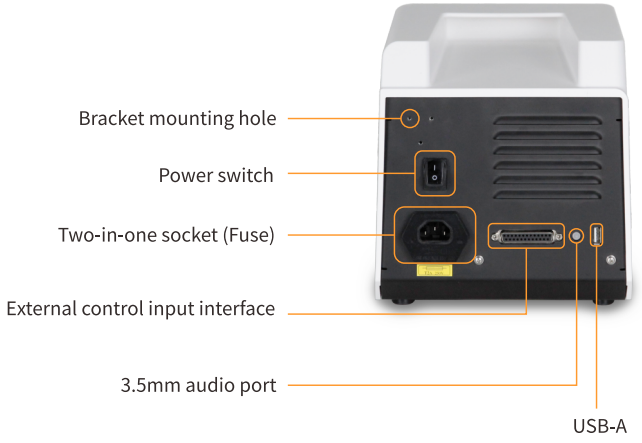

Note:

- **Mounting Hole:** For installing the optional handheld dispenser bracket.
- **Power Switch:** [O] for off, and [–] for on.
- **Combo Socket:** For power supply, containing fuse.
- **External Control Interface:** For connecting signal cable on the DB25 male connector.
- **3.5mm Audio Jack:** Stereo, 3-pole, for installing foot switch or handheld dispenser with same interface.
- **USB-A:** USB interface for program upgrading.

Name	Function Description	Interface Type
Bracket mounting hole	Can install the optional handheld dispenser bracket.	M3
Power switch	The button to turn power on and off.	
Combo socket	To supply power for the pump, containing fuse.	
Communication and signal interface	Communication, signal input and output.	DB25-F
Foot switch interface	Accessory to connect foot switch	φ3.5mm Audio Jack
USB interface	The USB stick for program upgrading	USB-A 2.0

4.2 Pin Definition of Communication and Signal Interface (Port F4)

The external control interface is a DB25-F connector, with specific pin assignments and definitions as follows:

Terminal Diagram	No.	Pin Definition	PC USB-RS485	Connection
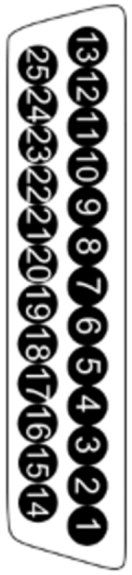	1	AIN_V/F+	No connection	Speed signal, 0~5V or 0~10V.
	14	AIN_I+(20mA)		Speed signal or sensor signal, 0~20mA.
	2	AIN_COM		Reference ground of the signal source.
	15	VCC_5V(50mA)		Power supply output for customer's passive node usage.
	3	GND		
	16	R/S_IN+		Start/Stop control signal (+)
	4	R/S_IN-		Start/Stop control signal (-)
	17	Z/F_IN+		Running direction control signal (+)
	5	Z/F_IN-		Running direction control signal (-)
	18	SPEED_OUT_C		Signal output signal (+)
	6	SPEED_OUT_E		Speed output signal (-)
	19	STAT_OUT1		Exception status output signal node 1
	7	STAT_OUT2		Exception status output signal node 2
	20	R/S_OUT1		Run status export signal node 1
	8	R/S_OUT2		Run status export signal node 2
	21	Z/F_OUT1		Running direction export node 1
	9	Z/F_OUT2		Running direction export node 2
	22	P1_RS485-A	485-A	
	10	P1_RS485-B	485-B	
	23			
	11			
	24	485BUS_GND	485-GND	
	12	NC		
	25	DC24_OUT-		Output power 24V/0.1A
	13	DC24_OUT+		

Note: The start/stop and direction control signals are passive signal types. The input signals support 5V~24V levels (with an internal current limiting resistor of 1KΩ).

5. Handheld Dispenser Accessory Selection and Use

5.1 Key Features

1. Optional configuration: The handheld dispenser is an optional accessory that customers can purchase separately based on their specific needs.
2. Primary application: Small-Batch Liquid Dispensing
3. Installation position: Side Mounting on Drive Unit Bracket
4. Notice that the handheld dispenser is installed via magnetic adsorption, so it may affect the transfer of magnetically sensitive media.

5.2 Key Performance Indicators

No.	Item	Indicator
1	Model	PD-XX, where XX represents tubing number, e.g. PD-13 for tubing 13#.
2	Interface	3.5 mm audio jack
3	Functionality	Similar to foot switch, tubing fixing function added.
4	Number of keys	1
5	Compatible tubing	13#、14#、19#、16#、25#、17#、15#、24#
6	Tubing mounting method	Two mounting methods. The first method is tubing direct installation, and the second method is tubing plus dispensing needle installation. Notice that the end face must not be contacted during installation.
7	Installation and fixing	Can be mounted on the bracket on the side of the drive unit.
8	Wire length	2 meters

5.3 Installation

There are three threaded holes on rear side of the GD drive unit. The handheld dispenser bracket can be installed using three M3*8 screws. The bracket is constructed from Q235 steel, and powder-coated white. The handheld dispenser is attached to the bracket via magnetic adsorption. To prevent accidental slippage of the dispenser, the bracket features an intelligent anti-slip design, the limit points in both the downward and backward directions.

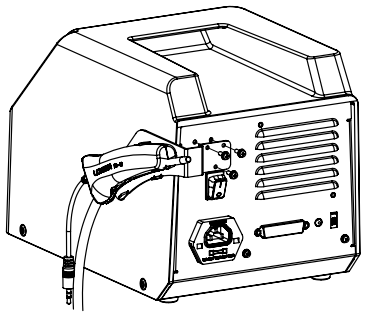

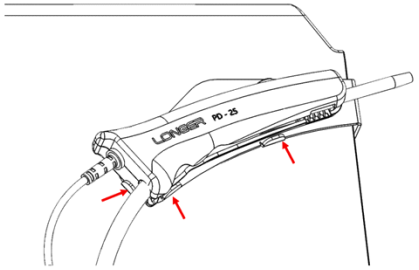

5.4 Tubing and Filling Needle Installation

The handheld dispenser offers two flexible installation configurations: direct tubing connection and connection with an added dispensing needle.

For tubing direct installation, insert the front end of the tubing into the designated front card slot or groove on the dispenser body, and adjust the tubing protrusion size according to the different tubing to reduce tubing vibration during use. Then insert the middle part into the middle card slot in the housing, and clip the rear tubing part into the rear card slot on the outer shell to secure it. Finally adjust the length inside of the housing

When using dispensing needle, first assemble the dispensing needle and the tubing into one integrated unit. Then install the overlapping section of the dispensing needle and tubing into the front-end card slot of the handheld dispenser, and install the rest parts and tubing directly.

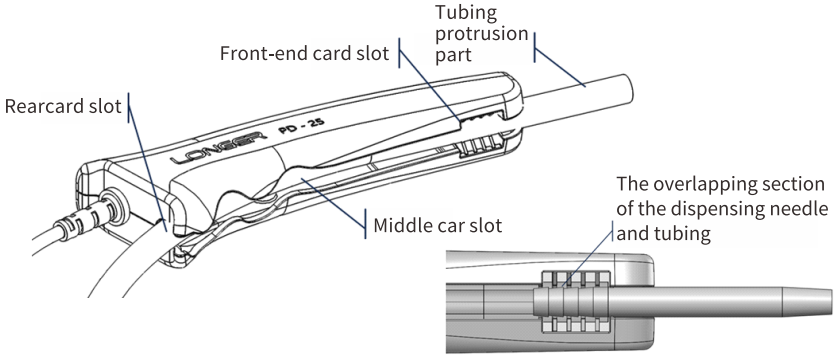

6. Operation Instruction

6.1 Icon Description

LONGER	The logo of Longer Pump
Continu-ous Mode	Blue theme, continuous mode
Time Mode	Purple theme, time mode
Volume Mode	Origin theme, volume mode
	Counter-clockwise direction
	Clockwise direction
	Calibration
− +	Key parameter tuning, adjusting the minimum resolution for every click
	Scheduled start
	Flow sensor enable
	Communication enable

	Voice enable
	Reset
	Help, click to show Help screen
	Lock enable
	Lock disabled
	Edit
	Expand setup screen, or increase digital value
	Decrease digital value
	Drow-down list
	Enable function
	Disable function

6.2 Operation Panel Explanation

6.2.1 Membrane Description

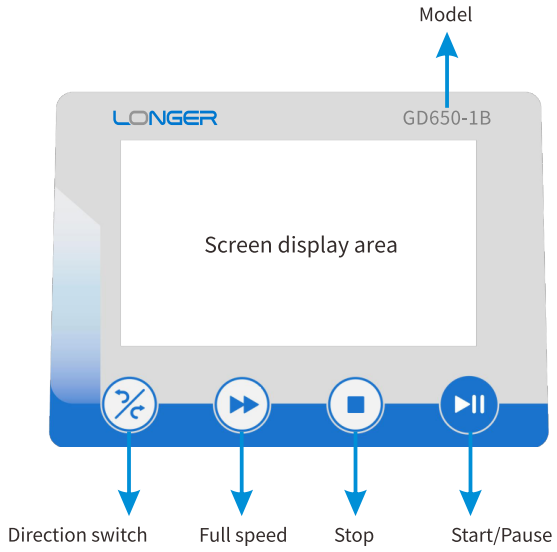

- **Direction Switch**: Switch running direction on every click. Functional in local continuous mode, time mode during run start and stop operation. Non-functional in full speed running. The icon ◯ on the running screen indicates the running direction.
- **Full Speed Run**: Effective on short, one-key control for full-speed operation. Used in quick emptying and filling. Functional in local continuous and time mode during start and stop operation. Functional in local volume mode when stopped. When running at full speed, icon [⚡] is shown at top of user interface.

- **Stop**: When clicked, current pump operation is stopped. Run state "Stopped" is shown in the middle of the running screen.
- **Start/Pause**: When clicked, the pump under standby and paused state will start to run, and the running pump will pause. Relevant run state Shows "Paused" or "Running" is shown in the middle of the running screen.

6.2.2 Menu Navigation

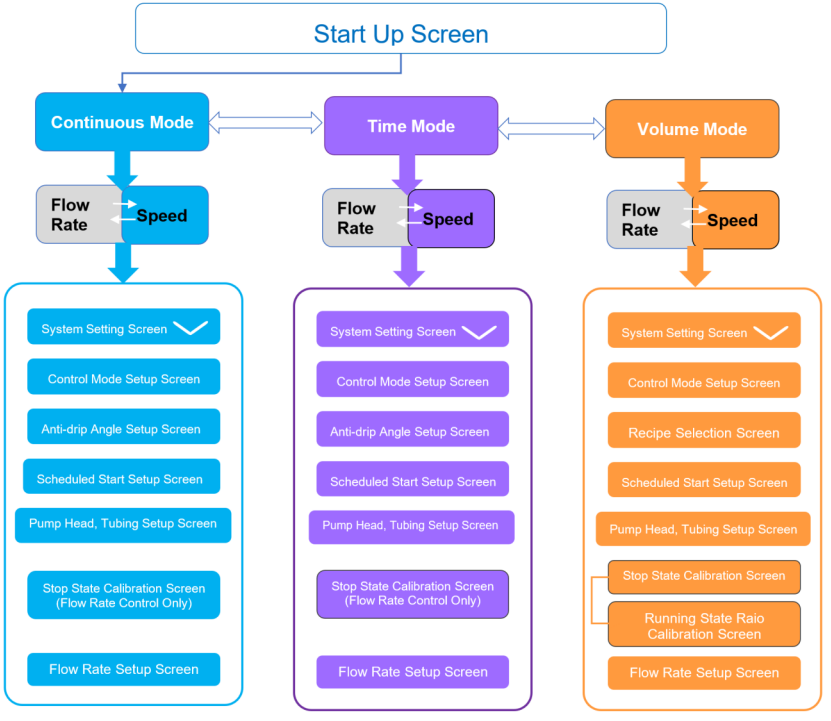

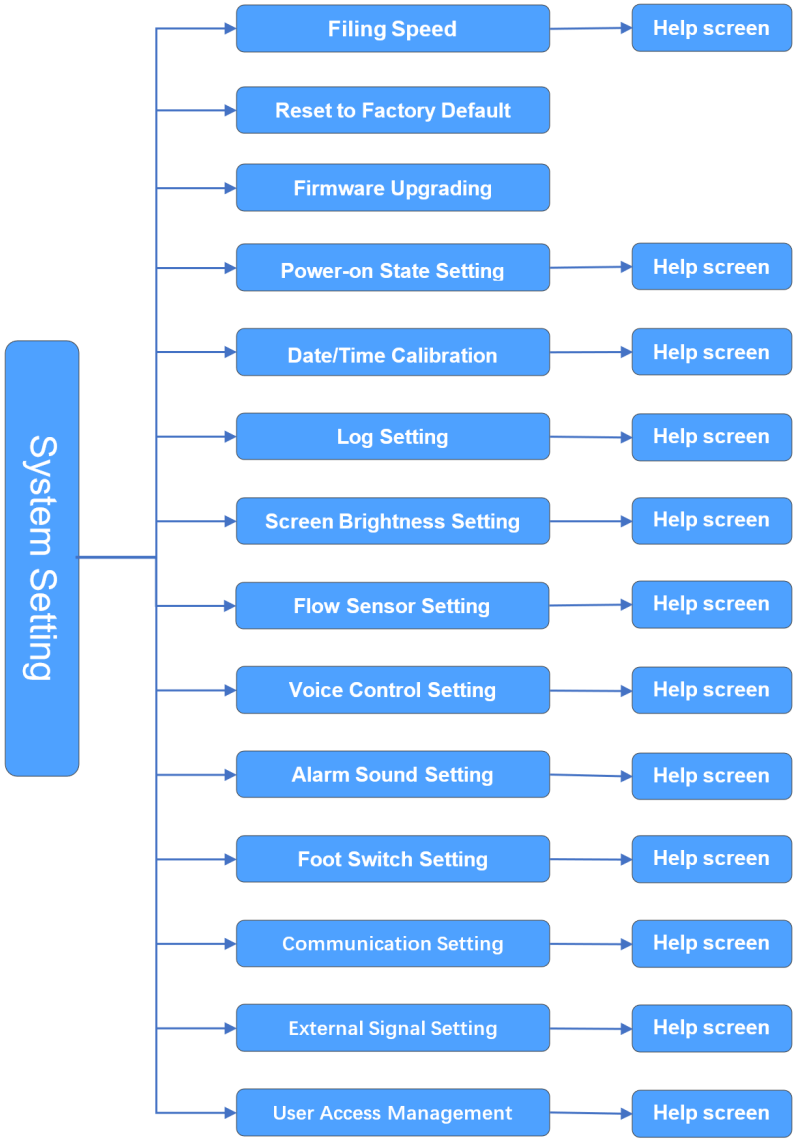

6.2.3 Function Module Layout on Running Screen

- The layout includes general area and dedicated area. The parameters in general area are similar for different work modes. The major parameters in dedicated area are different for different work modes.
- The left part of general area is designed as follows. On the top, it is the name of current user, unconfigurable. In the middle, it is system configuration, including work mode, pump head and tubing, configurable. At the bottom, it is current date and time, unconfigurable.
- On the top of the general area, it is status bar. On the left, it is communication parameter, unconfigurable. On the right, it is system setting and help, configurable.
- At the bottom of the general area, it is menu bar. On the left, it is function button. On the right, it is scheduled start count down.
- In the middle of dedicated area, the most important parameters are shown, e.g. run status, flow rate, run speed, volume, etc.
- On the right of dedicated area, the major parameters are shown on the top, configurable, and the accumulated parameters are shown at the bottom, can be reset to zero.

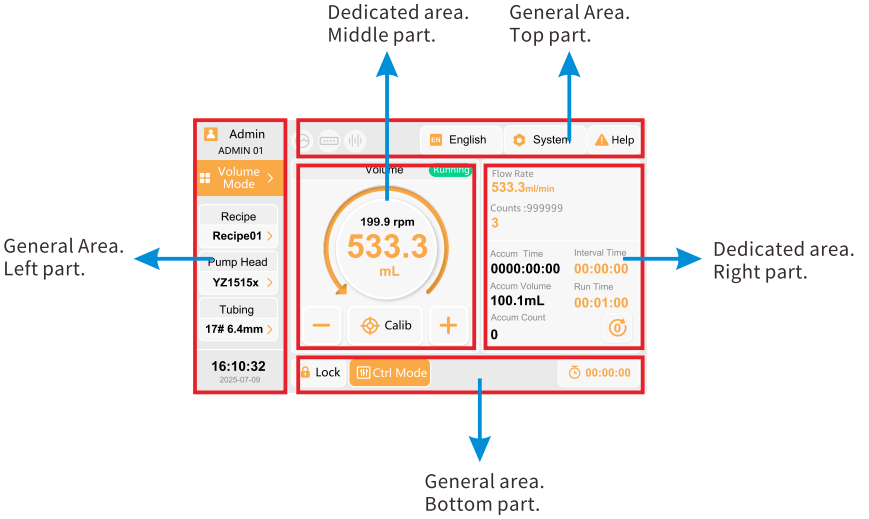

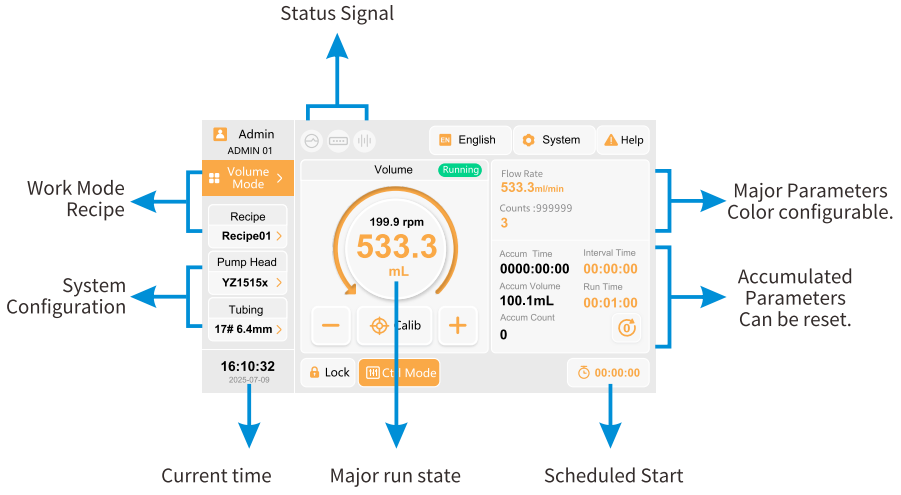

6.3 Pump Head/Tubing Configuration

The pump head and tubing configuration is effective in flow rate mode or volume mode only. The configuration is unavailable in speed mode.

Click the [Pump Head] and [Tubing] button on the running screen to navigate to the "Pump Head and Tubing Setup" screen to configure pump head and tubing. The compatible table for pump head and tubing specifications can be found in the "Compatible Pump Heads and Tubing" description. After changing the pump head, if the currently selected tubing is not supported by the newly selected pump head, the tubing specification will automatically restore to the default option which is compatible with the selected pump head.

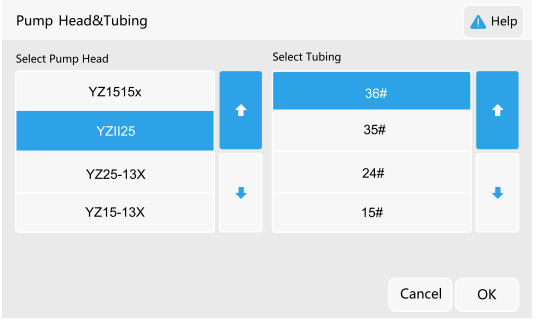

6.4 Running Screen - Work Mode Description

The GD series peristaltic pump supports three operational modes, i.e. continuous mode, time mode, and volume mode. The continuous mode includes continuous flow rate and continuous speed mode; the time mode includes time flow rate and time speed mode. The three modes can be switched directly via the user interface.

6.4.1 Continuous Mode (Blue Theme)

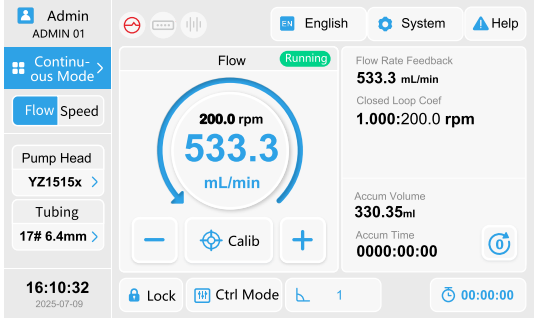

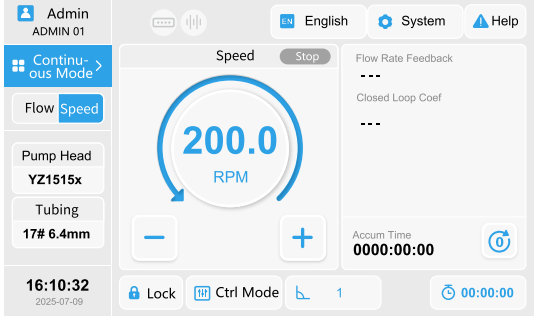

6.4.1.1 Work Mode Selection

The default startup mode is continuous mode. Switch work mode by clicking button [ ] on the top left on the screen and select continuous mode. When selected, the screen presents blue theme. User can click [Flow Rate] or [Speed] button to select flow rate mode or speed mode. Comparing these two modes, parameter pump head, tubing, flow rate, and flow rate calibration can be configured in flow rate mode. Meanwhile, flow sensor can be activated.

6.4.1.2 Run State Configuration

The operation status of the pump is primarily controlled through membrane keypad operations, and different statuses can be displayed on the user interface, refer to 6.2.1 membrane description.

The key points in run state display are:

- Running direction, the icon in the middle of the user interface.
- The pump start and stop state includes three kinds of states, i.e. running, paused, and stopped. Under different run state, some functions are unavailable. Refer to following table for details.

Run State	Running Running	Paused Paused	Stopped Stop
Mode switch	×	×	√
Reset to zero	×	√	√
Pump head and tubing switch	√	√	√
Direction switch	√	√	√
Parameter fine-tuning,－、＋	√	√	√
Anti-drip angle	√	√	√
Control mode	√	√	√
Count down	√	√	√
Lock	√	√	√
Calibration	×	×	√

6.4.1.3 Working Parameters Configuration

Parameter modification: click the parameter inside icon , e.g. , 600 r/min to show digital keypad for parameter modification.

Parameter fine-tuning: click button [–] or [+] to make fine-tuning. The parameter value is adjusted by its smallest resolution value with each click.

Note 1: In flow rate mode, the major parameter is flow rate, and secondary parameter is speed value.

Note 2 Both methods support clicking [–] and [+] button to adjust the parameter. The system also supports clicking the parameter to edit it. The adjustment can be in standby state or running state.

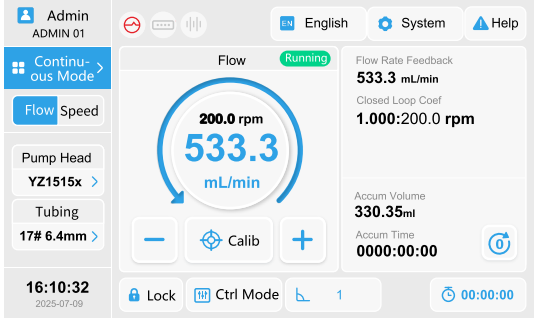



6.4.1.4 Calibration Settings

On the running screen, the calibration button Calib is between [–] and [+] button. The calibration can be performed when the pump is in the stopped or paused state.

Note: The calibration function is functional only in flow rate mode. and calibration is not needed in speed mode.

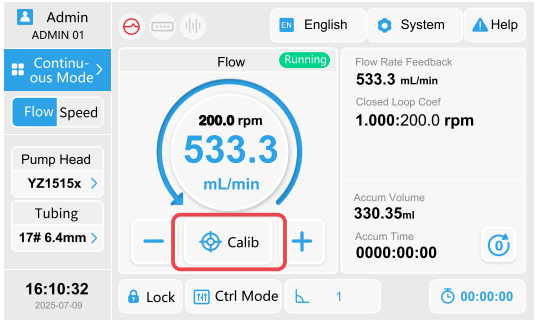

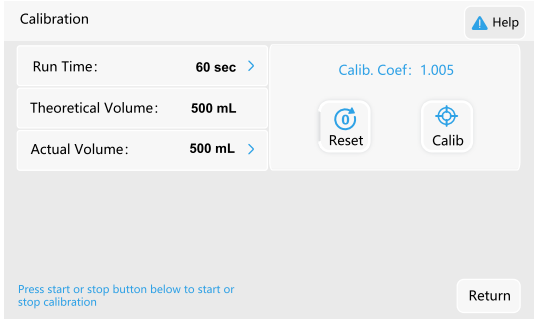

Notice that the calibration process is described as below.

1. Click [Run Time] to set target run time.
2. The theoretic volume is the target volume, unconfigurable.
3. Click [Start] button to complete the calibration.
4. When fluid transfer is completed, measure the weight of output fluid, and input the value into [Actual volume] field.
5. Click [Calibration], system will make calibration automatically. Repeat step 3 to 5 and check if the calibration is successful. Generally, 2 to 3 attempts are sufficient for successful calibration
6. Click [Reset] button to cancel calibration, and re-input actual volume to calibrate or return.
7. Click [Confirm] button to save calibration parameter and return, or click [Cancel] button to discard calibration parameter and return.

6.4.1.5 Key Parameters Configuration

When flow sensor input is enabled, the values from the pressure sensor and flow sensor will be displayed on the right-side of the key parameter display area. The flow sensor icon [ ] will be shown on the top of the screen.

The key parameters in continuous mode are nonconfigurable.

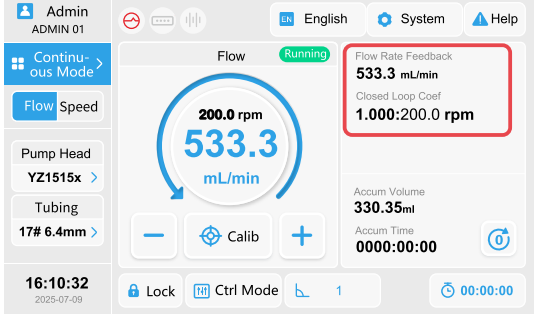

6.4.1.6 Accumulated Parameters Reset

In Continuous Mode, the accumulated volume and accumulated time will be displayed on the right side. The accumulated parameters can be cleared by pressing the [ ] button on the right bottom area.

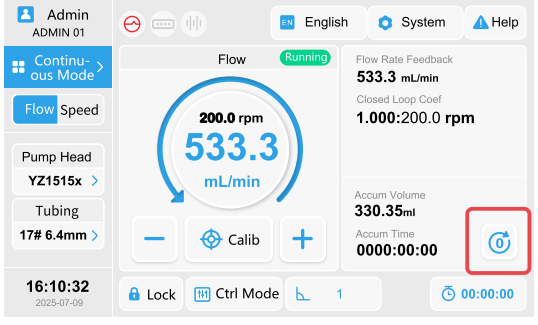

6.4.1.7 Scheduled Start

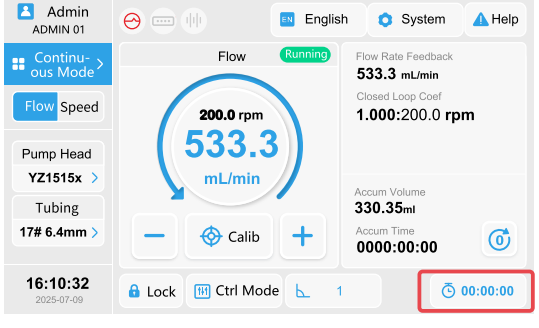

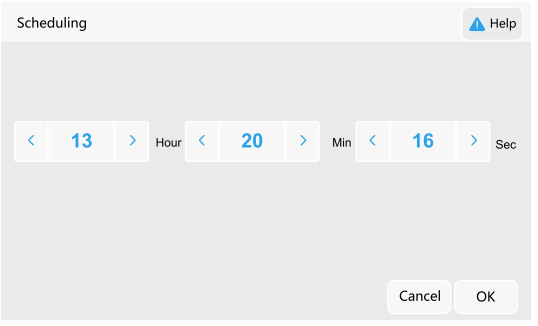

[Scheduled Start]: Clicking the [ ] button on the right bottom area to enter scheduled start setting screen to configure the scheduled start time. A scheduled countdown will appear on the running screen. After clicking scheduled start, a countdown will begin. The system will start when the countdown reaches zero. The specific operations are as follows:

a) Click the [XX] for,hour, minute, and second to show the digital keypad for modification of the corresponding parameters. The maximum and minimum values permitted are displayed above the digital keypad.
b) Click button [<] or [>] to decrease or increase time parameter by a fine-tuning step of 1.
c) Click [Confirm] button to save the settings and return. The settings will take effect on the next time scheduled start is triggered.
d) Click [Cancel] to discard the settings and return.

6.4.2 Time Mode (Purple Theme)

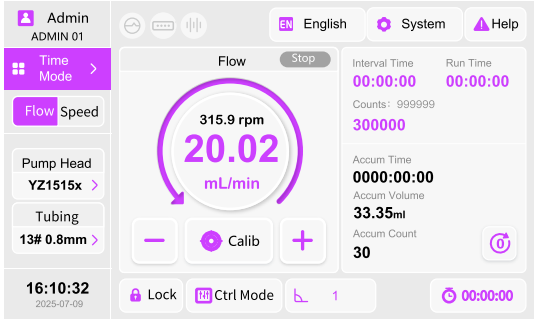

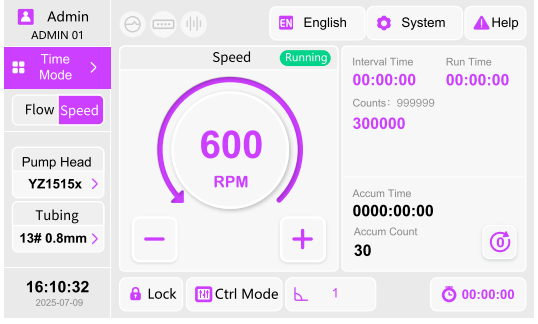

6.4.2.1 Work Mode Selection: Same as continuous mode

6.4.2.2 Run State Configuration: Same as continuous mode

6.4.2.3 Working Parameters: Same as continuous mode

6.4.2.4 Calibration Settings: Same as continuous mode

6.4.2.5 Key Parameters Configuration

In time mode, parameters such as interval time, single running time, and target count on the right-side of key parameter display area are configurable. The digital keypad will be shown for editing when those options are clicked.

In time mode, the flow sensor can also be enabled.

6.4.2.6 Accumulated Parameters Reset: Same as continuous mode

6.4.2.7 Scheduled Start: Same as continuous mode

6.4.3 Volume Mode (Orange Theme)

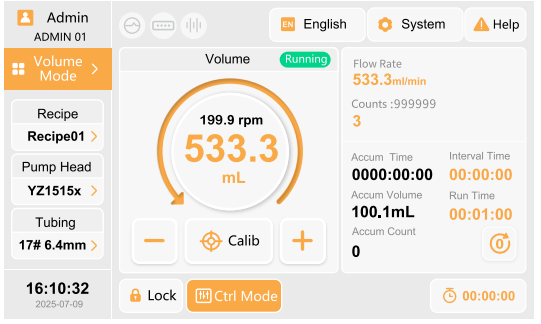

6.4.3.1 Work Mode Selection

Click button [ ] on the upper left corner of the touchscreen and select volume mode, the screen will show an orange theme. In volume mode, It is flow rate mode, the flow rate and speed mode option button is replaced by recipe selection button. Click button [Pump Head] and [Tubing] on the left side, or [Flow Rate] and [Target Count] on the right side to enter the recipe editing screen for the currently used recipe. Click [Recipe Recipe01]button to enter the recipe list screen for recipe selection. The specific operations in the setting interface are as follows:

a) Click [Search] to show the numeric/alphabet keypad to input a recipe name for searching.
b) Click the recipe in the recipe list on the left to select a recipe.
c) Click [Edit] to enter the selected recipe for recipe editing.
d) Click [↑] and [↓] to scroll through pages.
e) Click [Confirm] to save the settings and return. click [Cancel] to discard the settings and return.

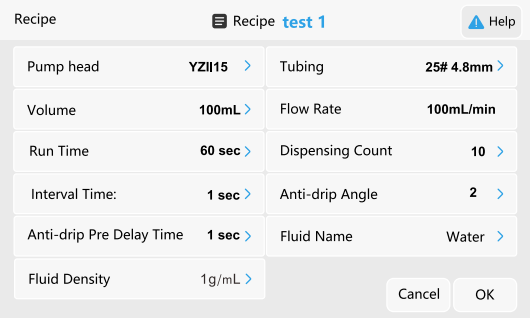

6.4.3.2 Run State Configuration: Same as continuous mode

6.4.3.3 Working Parameters: Same as continuous mode

6.4.3.4 Calibration Settings

On the running screen, the calibration button [Calib] is between [–] and [+] button. The calibration in volume mode includes standard calibration and ratio calibration. The calibration can be performed when the pump is in the stopped or paused state, click the calibration button to enter ratio calibration setting screen when pump is in running state.

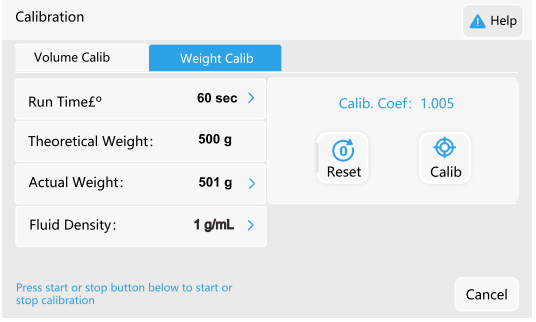

The standard calibration process is as follows:

1. Click the [Weight Calibration] or [Volume Calibration] button to select the calibration unit. The volume calibration is the same as [Calibration Settings] in section 6.4.1.4.
2. Click [Run Time] to set the target run time.
3. Click [Fluid Density] to set Fluid Density.
4. The [Theoretical Volume] is the target volume and cannot be set.
5. Click the [Start] button to complete one fluid transfer.
6. After the transfer is completed, weigh the output volume and input the result into [Actual Volume].
7. Click the [Calibrate] button, and the pump will calibrate automatically. Repeat steps 5 to 7 to check if the calibration is successful. Generally, 2 to 3 attempts are sufficient for successful calibration.
8. Click the [Reset] button to cancel calibration, allowing user to re-input the [Actual Volume] for calibration or return.

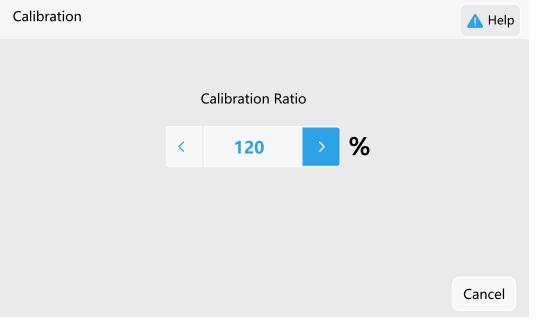

The ratio calibration process operates as follows:

1. First, input the ratio calibration, the base value is 100%.
2. Click [XX%] to enter the digital keypad, where the calibration value can be input. The calibration range is 50% to 150%. Values outside of this range will trigger an audible alarm.
3. Click [<] or [>] to decrease or increase the value by 1% on every click.
4. Click the [Confirm] button to confirm the input. Then follow the prompt to determine if the calibration is complete.

6.4.3.5 Key Parameters Configuration

In volume mode, parameters such as flow rate, speed, target count, single running time, and interval time are displayed on the right-side of key parameter display area. Clicking on this area will enter the recipe settings for recipe adjustment. The specific operations in the setting interface are as follows:

a) Click [Recipe Selection] to enter the recipe list for recipe selection.

b) Click [Pump Head] or [Tubing] to configure the pump head or tubing.

c) Click [Single Dispensing Volume] to show the numeric/alphabet keyboard for volume setting. the speed is calculated automatically based on the volume and running time parameters.

d) Click [Single Running Time] to show the numeric/alphabet keyboard for single run time setting.

e) Click [Interval Time] to show the numeric/alphabet keyboard for interval time setting.

f) Click [Target Count] to show the numeric/alphabet keyboard for number of dispensing setting.

g) Click [Confirm] to save the settings and return. click [Cancel] to discard the settings and return.

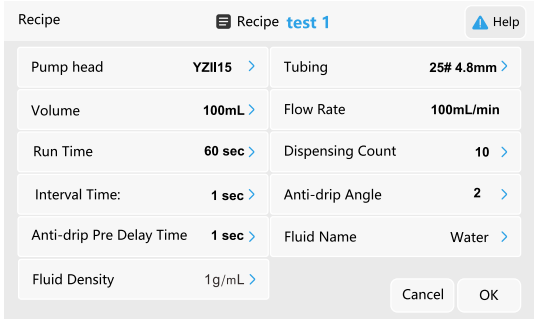

6.4.3.6 Accumulated Parameters Reset: Same as continuous mode

6.4.3.7 Scheduled Start: Same as continuous mode

6.5 Control Mode Settings

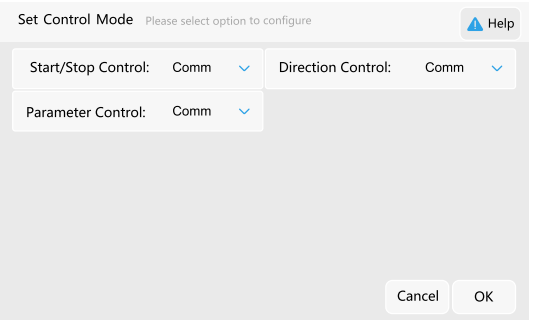

The control modes vary across different operating modes, as detailed in the following table:

Work Mode	Control Command	Signal Source
Continuous mode	Run speed	Local, Communication, Local + Communication, External Control
	Start and stop	Local, Communication, Local + Communication, External Control
	Running direction	Local, Communication, Local + Communication, External Control
Time mode Volume mode	Parameter control	Local, Communication, Local + Communication
	Start and stop	Local, Communication, Local + Communication, External Control
	Running direction	Local, Communication, Local + Communication, External Control

6.5.1 Local Mode

Local mode (also known as internal control mode) is the pump's default operating mode. It uses the membrane keypad and touchscreen for parameter adjustment, direction control, start and stop control. For detailed operations, please refer to section 5.2 "Operating Membrane Instructions."

6.5.2 External Control Mode

External control mode is the remote-control mode that uses external signals to control the pump's speed, running direction, start and stop function. To activate this mode, press the[System] button on the running screen to enter the system setting screen, then click [External Control Ext Ctrl] button to access the external control configuration interface. Once the external control mode is enabled, the external control icon will be display on the top of the running screen. The detailed operations are as follows:

a) Click [Start/Stop Signal "∨"] to select one of four options: "High Level", "Low Level", "Rising Edge", or "Falling Edge".

b) Click [Speed Signal ">"] to enter the speed signal setting screen to choose one of four signal types: "4-20mA", "0-5V", "0-10V", or "0-10kHz".

c) Click [Direction Signal "∨"] to configure the direction control signal, selecting from "High Level", "Low Level", "Pulse Rising Edge", or "Pulse Falling Edge".

d) Click [Confirm] to save the settings and return, or click [Cancel] to discard the changes and return.

Note:

There is only one channel for 4~20mA signal. After it is set as the speed signal source, the "Flow Sensor" enable function will be automatically disabled.

Definition of Signal Interface	
4-20mA+	DB25(PIN14)
4-20mA-	DB25(PIN2)
0-5V/0-10V+	DB25(PIN1)
0-5V/0-10V-	DB25(PIN2)
0-10KHz+	DB25(PIN1)
0-10KHz-	DB25(PIN2)

Description of signal options	
High Level	Input voltage 5V-24V
Low Level	input voltage 0-0.7V
Rising Edge	Change from low level to high level
Falling Edge	Change from high level to low level

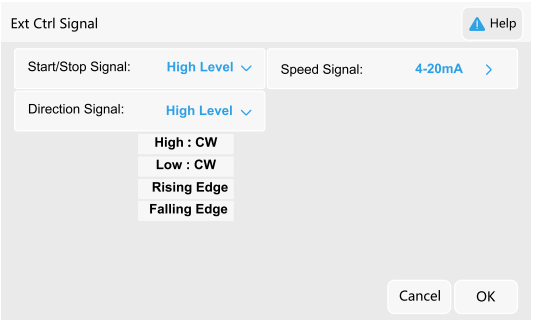

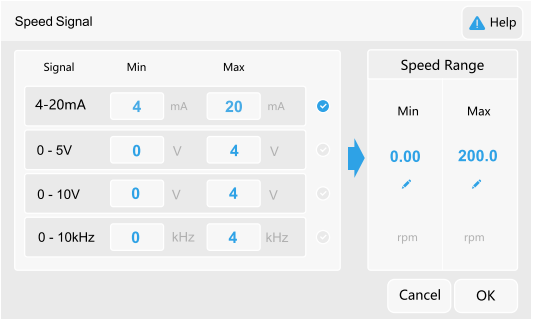

6.5.3 Communication Settings

The GD drive supports communication control by a host computer via RS485 and Ethernet, supporting both Modbus RTU and Longer OEM protocols. When the communication mode is active, the communication icon [ ] will be shown on the top of the running screen. For details on the communication interface, please refer to section 4.2. The detailed operations in the setting interface are as follows:

a) Click [Communication Enable] to enable or disable the communication mode.
b) Click [Communication Protocol "∨"] to select the communication protocol, with options for "Longer OEM" or "Modbus RTU".
c) Click [Communication Address] to set the communication address. For the Longer OEM protocol, address 1 to 30 is valid. for the Modbus protocol, address 1 to 247 is valid.
d) Click [Baud Rate "∨"] to select the baud rate. Options are 1200bps, 9600bps, 19200bps, 38400bps, and 115200bps.
e) Click [Parity Bit "∨"] to select the parity bit. Options are odd, even, and none.
f) Click [Confirm] to save the settings and return, or click [Cancel] to discard the settings and return.

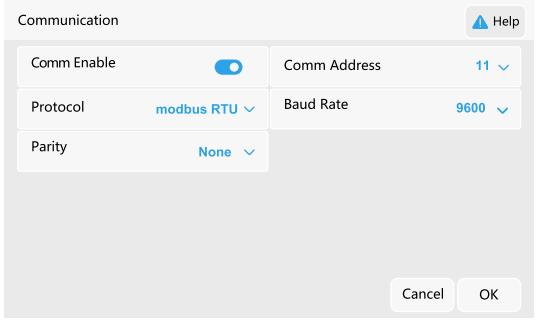

6.6 System Settings

Click the [System] button on the top of the running screen to enter the system setting screen.

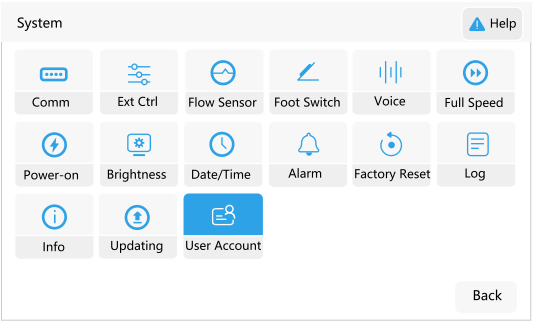

6.6.1 Access Management

Click [System] button and then [Access] button to enter the settings screen to edit user login, multi-user setting, and user password. Once login activation is enabled, user selection is mandatory upon startup.

The administrator can set up to 9 non-administrator users, configure login activation, permissions, passwords, etc., as needed. The permissions for different members are detailed in the definition of “Three-Level User Access Management”.

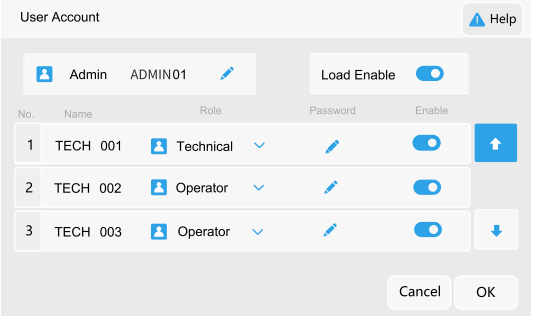

Three-Level User Access Management						
	No.	Parameter	Administrator	Technical	Operator	Note
Permission	1	Start & Stop	√	√	√	Working Parameters include pump head, tubing, and anti-drip. If user does not have permission to perform the requested operation, prompt "Permission no assigned." will show up.
	2	Direction	√	√	√	
	3	Full speed	√	√	√	
	4	Operation parameter modification	√	√	√	
	5	Work mode	√	√	√	
	6	Control mode	√	√	×	
	7	Screen lock/unlock	√	√	√	
	8	Accumulated parameter reset	√	√	×	
	9	Calibration	√	√	√	
	10	Language	√	√	√	
	11	Foot switch setup	√	√	×	
	12	Voice setting	√	√	×	
	13	Display setting	√	√	×	
	14	User access management	√	×	×	
	15	External control setting	√	√	×	
	16	Communication setting	√	√	×	
	17	Start-up setting	√	√	×	
	18	Flow sensor	√	√	×	
	19	Firmware upgrading	√	×	×	
	20	Restore to factory default	√	×	×	
	21	Version Information	√	√	√	
	22	Password modification	√	√	√	The administrator can modify the password of all users; other role can only modify his own password.

6.6.2 External Control Settings

Same as section 6.5.2.

6.6.3 Communication Settings

Same as section 6.5.3.

6.6.4 Foot Switch Settings

Click button [System] and then [Foot Switch] to enter the configuration screen. The foot switch signal is connected to the audio jack on the back of the pump. This function is only effective in local (manual) control mode. The foot switch is identical to the start/stop button, and both are valid simultaneously. The specific operations are as follows:

a) Click [Foot Switch Enable] to enable or disable the function.
b) Click [Signal Type "∨"] to select the signal type. Available options are lift up run, step on run, and lift up switching.
c) Click [Confirm] to save the settings and return, or click [Cancel] to discard the settings and return.

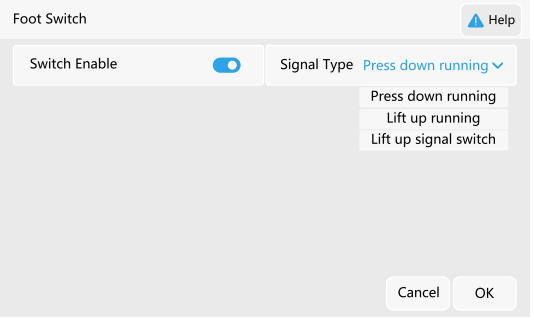

6.6.5 Alarm Sound Settings

Click button [System] then [Alarm Settings] to enter the configuration screen to set alarms for the following functions. Each option can be controlled independently. when enabled, the alarm will be functional for that item:

- [Task Completion]: When enabled, an alarm will sound upon task completion. The alarm sound is beep-beep-beep.
- [Imminent Completion]: When enabled, a time can be set. The alarm will start when the task is within specific time of completion. The alarm sound is beep-beep-beep.
- [Key Click]: Touch button sound switch setting.
- [Device Fault]: When an internal fault is detected, the alarm is triggered. The alarm sound is beep-beep-beep.

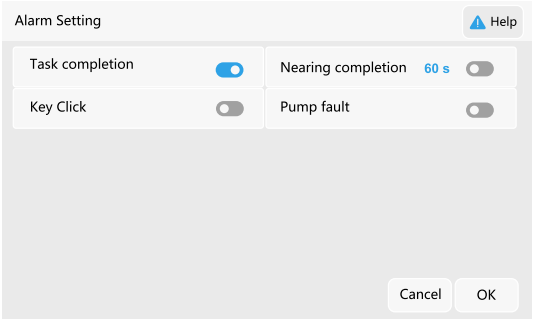

6.6.6 Voice Control Settings

Click button [System] then [Voice Settings] to enter the voice configuration screen. This function can be enabled to set the peristaltic pump number (Pump 1 to Pump 4), enable voice control for peristaltic pumps according to their assigned numbers. It can also control all pumps simultaneously. The specific operations are as follows:

a) Click [Voice Enable] to enable or disable the voice control function. When disabled, the pump will have voice feedback but will not execute commands.

b) Click [Direction Switch] to enable or disable the direction switch function. When disabled, the pump will have voice feedback but will not execute the direction switch command.

c) Click [Control Number "∨"] to select the pump number for control.

d) Click [Confirm] to save the settings and return, or click [Cancel] to discard the settings and return.

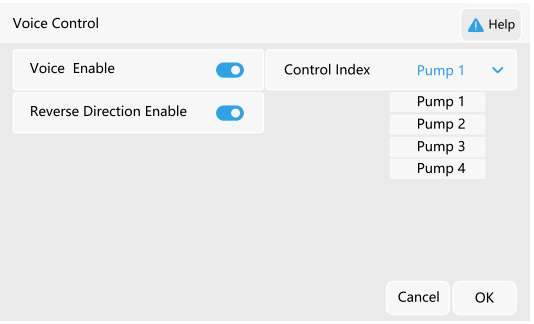

Note: The command and reply.

Instruction	Command	Pump Response
Disable waking up, emergency stop	All pumps e-stop.	E-stop executed
Wake up	Lan Xiaoge, Lan Xiaoge Xiaolan, Xiaolan Longer, Longer	I'm here
All pumps start	All pumps start.	All started
All pumps pause	All pumps pause.	All paused
All pumps stop	All pumps stop.	All stopped
All pumps run at full speed	All pumps at full speed.	All at full speed
All pumps exit full-speed mode.	All pumps exit full-speed mode.	All exited.
All pumps reverse direction.	All pumps reverse direction.	All reverse direction, please confirm.
Pump [X] starts.	Pump [X] starts.	Pump [X] started.
Pump [X] pauses.	Pump [X] pauses.	Pump [X] paused.
Pump [X] stops.	Pump [X] stops.	Pump [X] stopped.
Pump [X] runs at full speed.	Pump [X] at full speed.	Pump [X] at full speed.
Pump [X] exits full-speed mode.	Pump [X] exits full-speed mode.	Pump [X] exited.
Pump [X] reverses direction.	Pump [X] reverses direction.	Pump [X] reverses direction, please confirm.

6.6.7 Flow Sensor

The hardware interface for the flow sensor is the external control signal. Click button [System] and then [Flow Sensor] to enter the settings screen. The flow closed-loop function is only effective in Local mode. The specific operations are as follows:

a) Click [Sensor Enable] to enable or disable the function. When the sensor is enabled, current flow rate value will be displayed on the running screen.

Note: If the current external control is set to 4–20 mA, enabling the sensor will automatically change the external control signal to 0–10 V.

b) After clicking [Close Loop Enable], it automatically performs closed-loop adjustments to achieve the target set flow rate based on real-time flow feedback. The status area on the page displays the adjustment coefficient and the actual adjusted speed.

c) When [Sensor Enable] is enabled, set the signal flow rate table. This product supports 4-20mA or 0-20m signal.

d) Based on the signal configuration, set [Signal 1] to 0 or 4mA, and [Signal 2] to 20mA.

Signal 1: Corresponding to [Flow rate 1], setting the minimum flow rate. Recommended to be 0 ml/min.

Signal 2: Corresponding to [Flow rate 2], setting the maximum flow rate. Recommended to be 2 times of the flow rate to be measured.

e) Click [Confirm] to save the settings and return, or click [Cancel] to discard the settings and return.

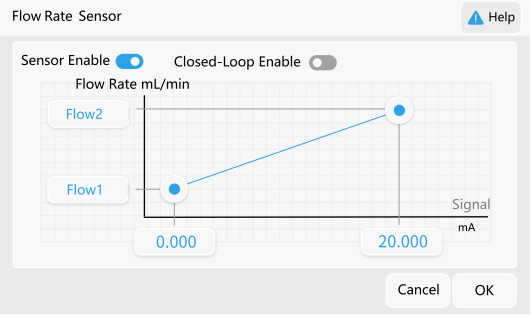

Accessory Installation:

a) Select the appropriate controller, sensor head, and clamp assembly based on the flow rate range.

b) Assemble the sensor head and clamp assembly.

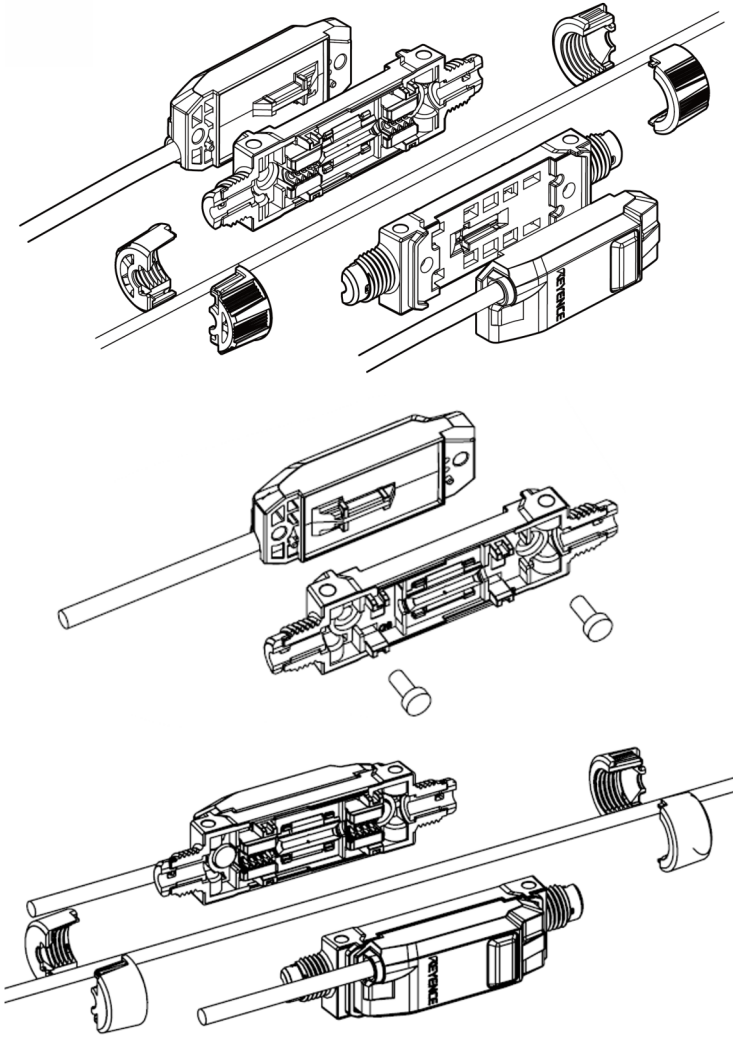

c) Install the tubing to be measured in the correct direction into the clamp assembly. Ensure the tubing is not kinked or twisted. Secure both ends with fixing rings.

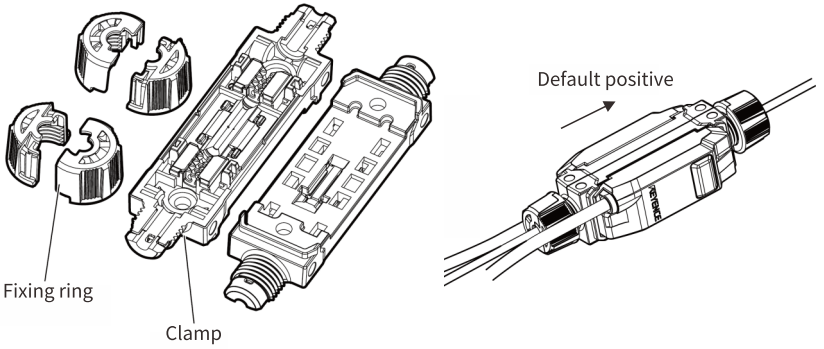

d) Connect the sensor head to the controller.

e) Connect the controller's DB25 connector to the drive's external control interface.

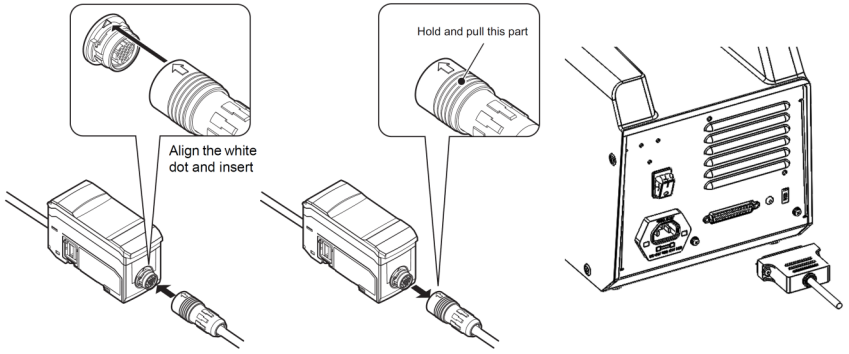

f) Display Settings of Flow Sensor.

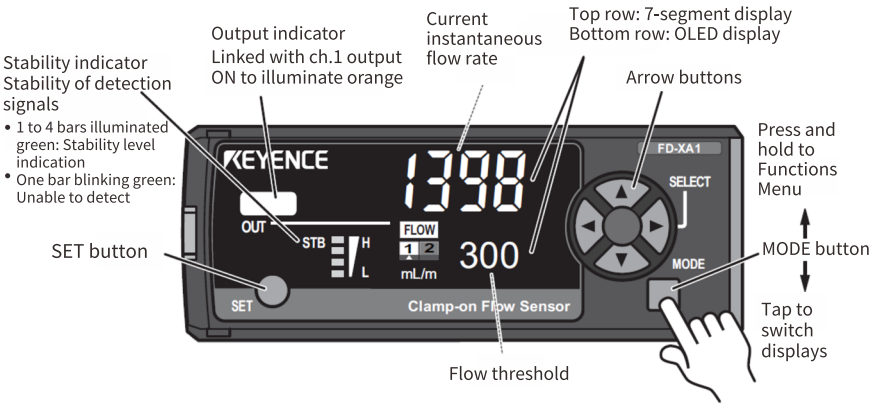

g) The basic settings are as follows (Refer to 5-1, Basic settings.) Please notice item 5, 6, and 7. The settings of the speed signal and corresponding flow rate must match those settings in the pump driver. please refer to the "FD-X Series Clamp-on Flow Sensor Instruction Manual".

h) Flow sensor calibration:

The flow sensor needs calibration under following conditions:

- The pump is operated for the first time.
- Pump installation position change or tubing change.
- The change of the measured flow rate is more than 50%.

First, make flow rate calibration (Refer to 6.4.1.4). Then make calibration for following deviations.

- Deviation 1: The deviation of flow sensor’s feedback flow rate shown on main page from the instantaneous flow rate shown on the sensor’s display. Adjust the [Flow rate 2] value, where: calibration reference = sensor’s instantaneous flow rate - pump’s feedback flow rate. Two values are almost the same after several adjustments.

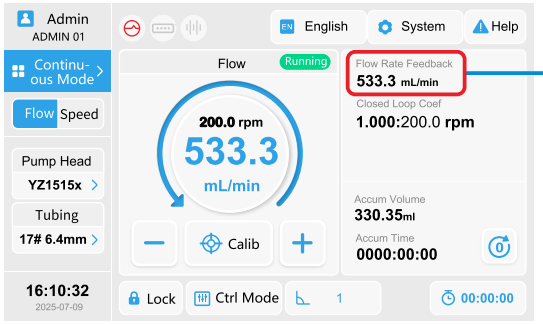

Feedback flow rate

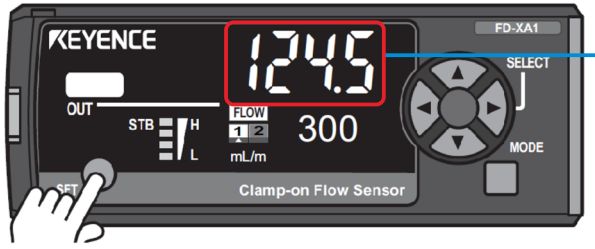

Instantaneous flow rate

- Deviation 2: The deviation of flow sensor' s feedback flow rate shown on main page or the instantaneous flow rate shown on the sensor' s display from the actual flow rate. Make span adjustment on the flow sensor (Refer to table 5-2 advanced settings in FD-X Series instrument manual for details), the displayed flow rate will change automatically.

  Note: The sensor' s instantaneous flow rate and pump' s feedback flow rate are instantaneous value. Any fluctuation or delay in the flow rate display is normal.

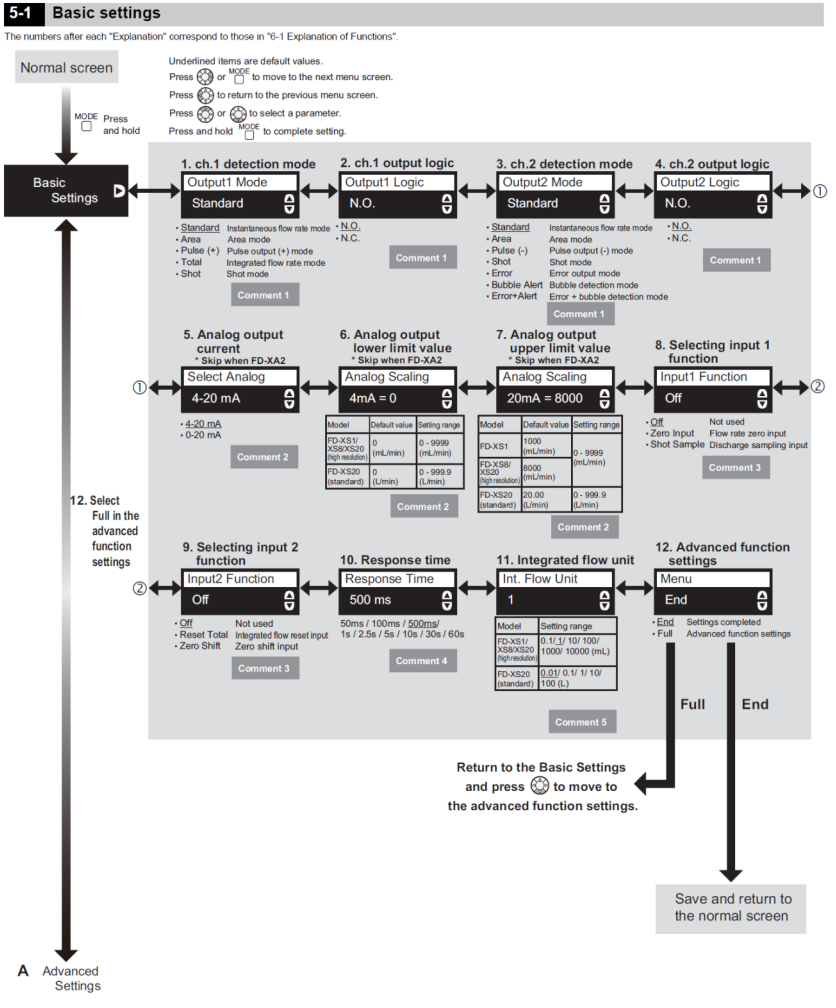

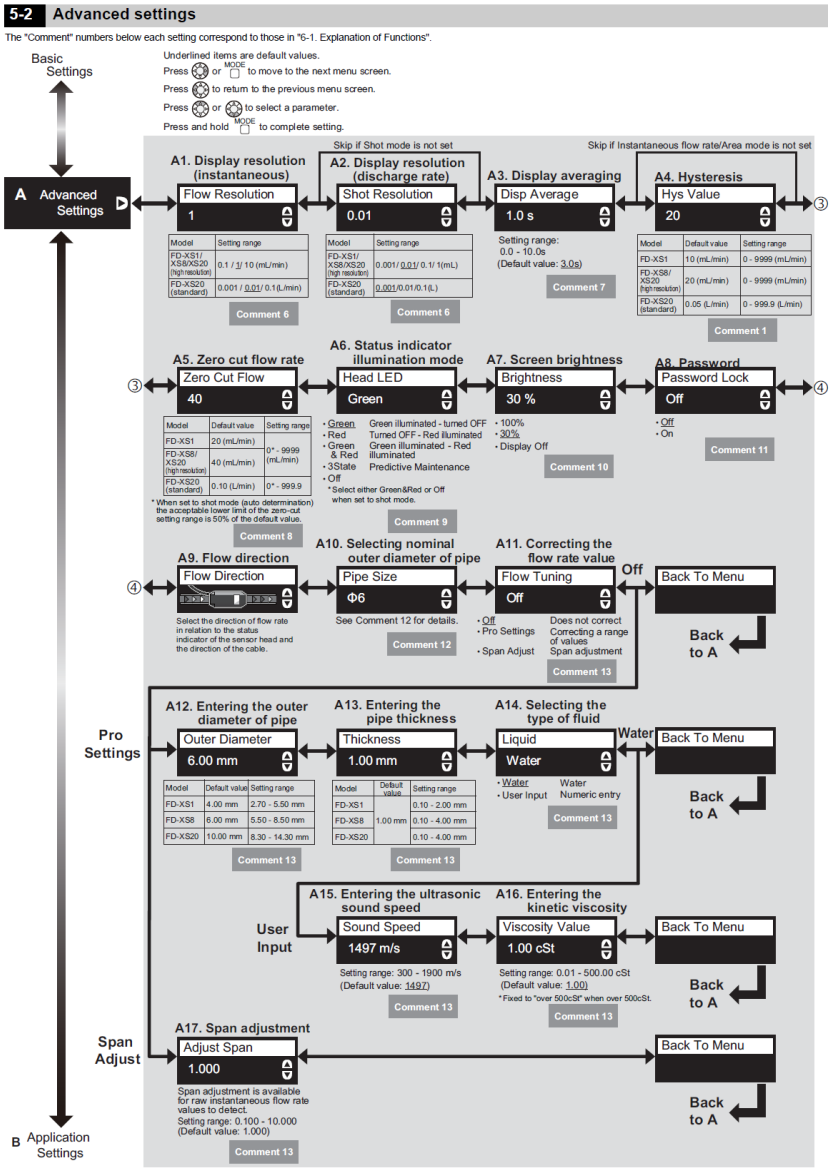

6.6.8 Screen Brightness Settings

Click button [System] and then [Screen Brightness] to enter the settings screen. Use button [<] and [>] to adjust the screen brightness.

Click [Confirm] to save the settings and return, or click [Cancel] to discard the settings and return.

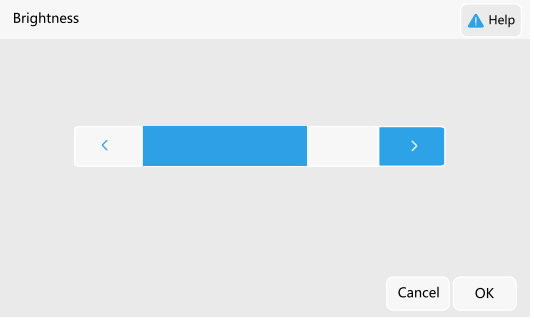

6.6.9 Firmware Upgrading Settings

The firmware upgrading operations are as follows:

a) Insert the USB drive containing the upgrade file, select the firmware to be upgraded.

b) On the system setting screen, click [Firmware Upgrade] to enter the firmware upgrade screen.

c) Click [Confirm] to proceed with the firmware upgrade. The pump will restart.

d) Click [Cancel] to abort this upgrade and return to the upgrade screen.

Note 1: The upgrade firmware, .bin file, must be stored in the root directory of the USB drive. The USB port is on the rear of the device.

Note 2: After the firmware is upgraded, the system will restart automatically. After the driver module is upgraded, a manual restart is required for it to take effect.

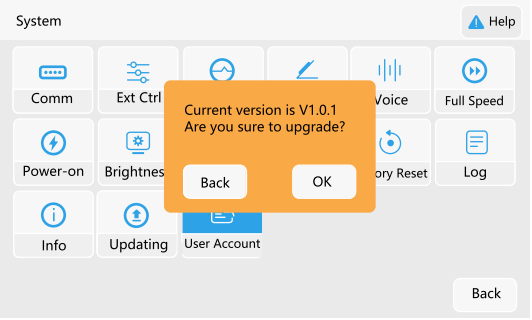

6.6.10 Reset to Factory Defaults

Click button [System] and then [Factory Reset], and a factory reset pop-up window will appear.

Click the [Confirm] button, and all user-configured parameters will be restored to their factory default values.

Click the [Cancel] button to return without any changes.

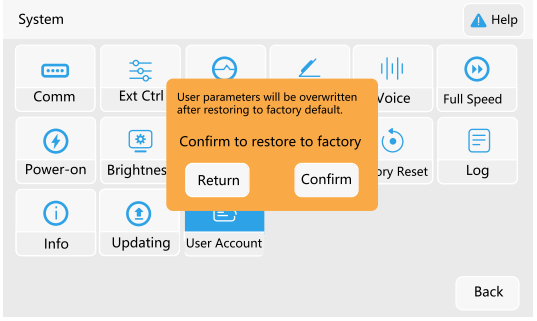

6.6.11 Log Settings

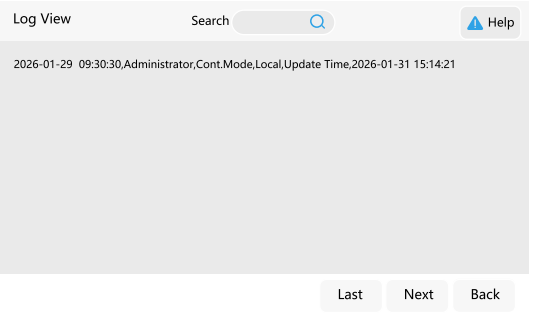

Click button [System] and then [Log] to enter the log settings screen.

Use button [Previous Page] and [Next Page] to go through and find log.

Use [Search] to get the logs before a specified time.

The host computer software can read the system logs via RS485 communication and generate a PDF-format log. The log exported from the host computer covers the following details:

Type	Time	User	Current Operating	Current Start/Stop Control	Action	Pump Head	Tubing	Calibration	Percentage	Updated Time	Changed Recipe ID
Calibration Log	✓	✓	✓	✓	✓(Start /Stop)	✓	✓				
Start/Stop Log	✓	✓	✓	✓	Calibration Log	✓	✓	✓	✓		
Time Update	✓	✓	✓	✓	Time Update					✓	
Factory Reset	✓	✓	✓	✓	Factory Reset						
Mode Change	✓	✓	✓	✓	Mode Change						
Recipe Change	✓	✓	✓	✓	Recipe Change						✓
Cumulative Clear	✓	✓	✓	✓	Cumulative Clear						
Update	✓	✓	✓	✓	Update						

6.6.12 Time Settings

Click button [System] and then [Date/time] to enter the setting screen. The specific operations are as follows:

a) Click [XX] for year, month, day, hour, minute, and second to enter a numeric keypad and set the corresponding parameters.

b) Click button [<] or [>] to make fine adjustments to the time parameters by decreasing or increasing them, with an adjustment step of 1.

c) Click [Confirm] to save the settings and return, or click [Cancel] to discard the settings and return.

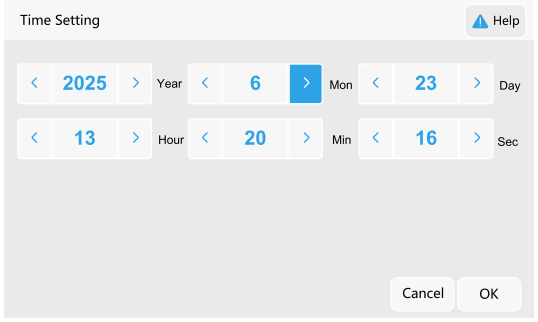

6.6.13 Power-On State Settings

Click button [System] and then [Power-On] to enter the setting screen. The power-on recovery function can be enabled. When enabled, the device will resume the operation just before the power supply off. The specific operations are as follows:

a) Click [Power-On Recovery] to enable or disable the function.

b) Click [Confirm] to save the settings and return, or click [Cancel] to discard the settings and return.

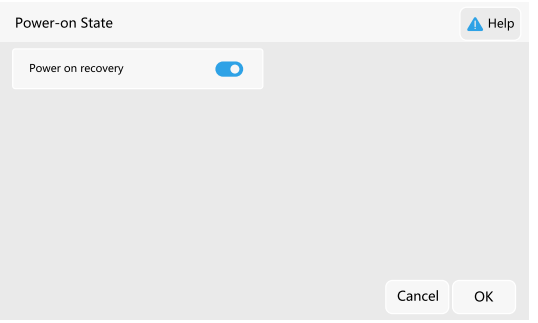

6.6.14 Filling Speed Settings

Click [Fill Speed] on the system setting screen to enter the setting screen. The specific operations are as follows:

a) Click [xx rpm] to show the numeric keypad for setting the fill speed.

b) Click [Confirm] to save the settings and return, or click [Cancel] to discard the settings and return.

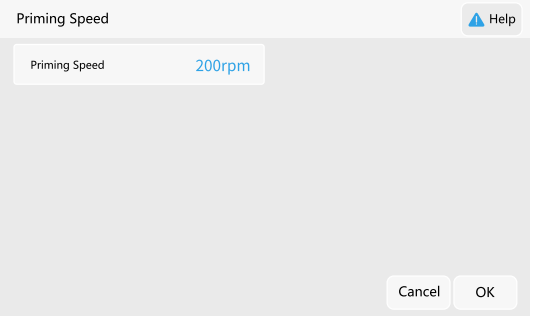

6.7 Anti-drip Angle Settings

Anti-drip angle setting is the angle of reverse direction after the run completion to solve the problem of residual droplets at the outlet. The specific operations are as follows:

a) In standby mode, click [ ] to edit the anti-drip angle.

b) The input range is 0~30, corresponding to the number of rollers (different pump heads have different angles corresponding to the same input value).

c) Click [OK] to save the settings and return, or click [Cancel] to discard the settings and return.

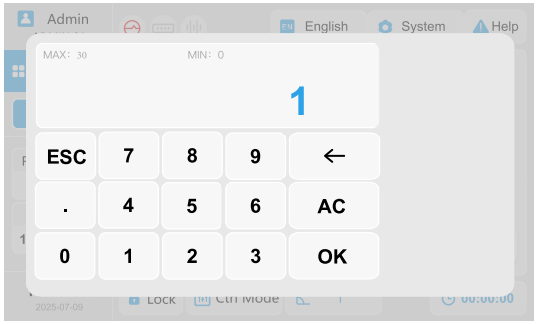

6.8 Screen Lock Setting

The lock screen button [Lock] is on the running screen, at the bottom of the general area. The screen lock can activate or deactivated. Once activated, all configurable features are disabled, and no button operations other than unlocking can be performed. The start/stop button and voice control are not affected.

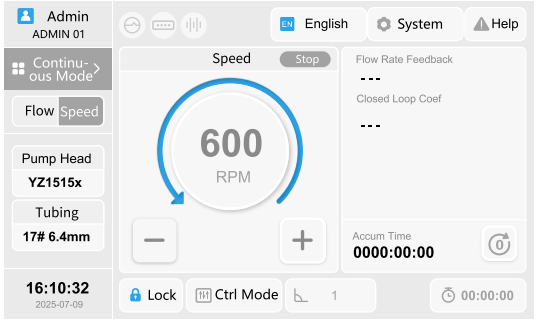

7. Modbus Register Address

7.1 Register Address

Type	Function	Address	Register Name	Read/ Write	Storage	Default	Description	Note
System	System	0x0001	Control code	R/W	N		0 - Stop, 1 - Start 2 - Pause, 3 - Resume	
	System	0x0005	Run direction	R/W	N		1 - Clockwise (or infusing, dispensing, depends pump type) 2 - Counter-Clockwise (or withdrawing, depends pump type)	
	System	0x0006	Max speed control	R/W	N		0 - Cancel full speed run, 1 - Full speed run	
	System	0x0007	Clear dispensing counter	R/W	Y		Read: Read back current working mode. Write: When writing 1, the accumulation information is cleared.	
Exnteral control	System		Reserved					
	System	0x0010	Device address	R/W	Y	1	Communication address, the range is 1 to 247.	Configurable locally, non-configurable by host.
	System	0x0011	Serial port communication baud rate	R/W	Y	5	Baud rate index, 0 to 4, corresponding to 1200, 9600, 19200, 38400, and 115200 bps respectively.	Same as above.
	System	0x0012	Serial port communication parity	R/W	Y	0	0 - None, 1 - Odd, 2 - Even	Same as above.
	System		Reserved					

Type	Function	Address	Register Name	Read/ Write	Storage	Default	Description	Note
Exnteral control	System	0x0021	Power-off restoring enable	R/W	N	0	0 - Disable, 1 - Enable	When enabled, pump will run or stop based on the running state at last power off.
	System	0x0022	Disable run direction change	R/W	Y		Customized function: - 0: Fixed clockwise direction. - 1 to 4: Direction control source selection. Write password 0x2511 first, and value 1 to 4 next to change direction control mode.	
	System		Reserved					
	Analog Input/ Output	0x0031	External start/stop signal setting	R/W	Y	0	Bit b1-b0: 00: Level trigger. Run at relay open, and stop at relay close. 01: Level trigger. Run at relay close, and stop at relay open. 10: Pulse trigger/ Switch start/stop at falling edge 11: Pulse trigger/ Switch start/stop at rising edge	
	Analog Input/ Output	0x0032	External run direction signal setting	R/W	Y	0	Same as above.	

Type	Function	Address	Register Name	Read/ Write	Storage	Default	Description	Note
Exnteral control	Analog Input/ Output	0x0033	External run speed input signal type	R/W	Y	0	0: 0 - 5V, 1: 0 - 10V, 2: 4 - 20mA, 3: 0 - 10KHz	
	Analog Input/ Output	0x0034	External control's maximum speed	R/W	Y	Maxim-um speed	Range: [Minimum speed + 1 rpm] to [Maximum speed] Unit: 0.01rpm	The minimum speed must be 1 rpm lower than maximum speed.
	Analog Input/ Output	0x0035	External control's minimum speed	R/W	Y	0	Range: 0 to [Maximum speed - 1 rpm] Unit: 0.01rpm	
	Analog Input/ Output	0x0036	Minimum value of external 5V input	R/W	Y	0	Range: 0V to [Maximum value - 1V], Unit: 0.01V	
	Analog Input/ Output	0x0037	Maximum value of external 5V input	R/W	Y	5V	Range: [Minimumimum value + 1V] to 5V, Unit: 0.01V	
	Analog Input/ Output	0x0038	Minimum value of external 10V input	R/W	Y	0	Range: 0V to [Maximum value - 1V], Unit: 0.01V	
	Analog Input/ Output	0x0039	Maximum value of external 10V input	R/W	Y	10V	Range: [Minimumimum value + 1V] to 10V, Unit: 0.01V	
	Analog Input/ Output	0x003A	Minimum value of external 4-20mA current loop input	R/W	Y	4mA	Range: 4mA to [Maximum value - 1.6mA], Unit: 0.01mA	
	Analog Input/ Output	0x003B	Maximum value of external 4-20mA current loop input	R/W	Y	20mA	Range: [Minimumimum value + 1.6mA] to 20mA, Unit: 0.01mA	

Type	Function	Address	Register Name	Read/ Write	Storage	Default	Description	Note
Exnteral control	Analog Input/ Output	0x003C	Minimum value of external 0-10KHz frequency input	R/W	Y	0	0 to [Maximum value - 1KHz], Unit: 1Hz	
	Analog Input/ Output	0x003D	Maximum value of external 0-10KHz frequency input	R/W	Y	10KHz	Range: [Minimumimum value + 1000Hz] to 10000Hz, Unit: 1Hz	
	System		Reserved					
	System		Reserved					
	System	0x004B	Maximum speed value	R	N		0 - 9999	
	System	0x004C	Maximum speed unit	R	N		Refer to "Unit register conversion table"	
	System	0x0051	Reserved					
Run parameter	Run parameter	0x0060	Run parameter register address lower limit	R/W	Y			
	Run parameter	.....	Run parameter ...	R/W	Y			
	Run parameter	0x0082	Run parameter register address lower limit	R/W	Y			
			Reserved					
			Reserved					

Type	Function	Address	Register Name	Read/ Write	Storage	Default	Description	Note
Calibration	Calibra-tion	0x00BF	Calibration type	R	N		0: Volume, 1: Weight, 2: Flow rate	
	Calibra-tion	0x00C0	Calibration value	R	N		0 - 9999	
	Calibra-tion	0x00C1	Calibration unit	R	N		Valid unit index is listed below: Refer to "Unit register conversion table"	
	Calibra-tion	0x00C4	Calibration coefficient	R/W	Y	10000	Unit: : 0.01%, Range: +/-50% (value 5000 to 15000) New coefficient = Current coefficient * actual volume / target volume	0.01%, +/-50%, 5000 - 15000
	Calibra-tion	0x00C5	Ratio adjustment	R/W	Y	10000	Unit: 0.01%, range: +/-5% (value 9500 to 10500)	The read is 10,000, and the write coefficient is superimpo-sed to the calibration coefficient
			Reserved					
System Information	System Informa-tion	0x0100						

Type	Function	Address	Register Name	Read/ Write	Storage	Default	Description	Note
System Information	System Informa-tion	0x0100	Error code	R	N		Error Code: bit4=1 Speed under-limit bit5=1 Speed over-limit, bit6=1 Micro steps under-limit bit7=1 Micro stpes over-limit, bit11=1 24V abnormal bit12=1 Temperature over fan on temperature bit13=1 Temperature over 65℃, temperature too high. bit14=1 Temperature over 70℃, temperature too high, run stopped.	
	System Informa-tion	0x0101	Run state	R	N		Run State: 0: Idle 1: Dispensing start delay 2: Dispensing 3: Antidrip pre delay 4: Antidripping 5: Delay complete 16:Filling 32:Withdrawing	
	System Informa-tion	0x0102	Direction	R	N		Same function as register address 0x0005	
	System Informa-tion	0x0103	Current run speed value	R	N			
	System Informa-tion	0x0104	Current run speed unit	R	N			

Type	Function	Address	Register Name	Read/ Write	Storage	Default	Description	Note
System Information	System Informa-tion	0x0105	Current flow rate value	R	N			
	System Informa-tion	0x0106	Current flow rate unit	R	N			
	System Informa-tion	0x0107	Single run completed volume value	R	N			
	System Informa-tion	0x0108	Single run completed volume unit	R	N			
	System Informa-tion	0x0109	Single run remaining time value	R	N			
	System Informa-tion	0x010A	Single run remaining time unit	R	N			
	System Informa-tion	0x010B	Remaining interval time value	R	N			
	System Informa-tion	0x010C	Remaining interval time unit	R	N			
	System Informa-tion	0x010D	Completed run cycles (higher word)	R	N			
	System Informa-tion	0x010E	Completed run cycles (lower word)	R	N			
	System Informa-tion	0x010F	Accumulated run time value	R	N			
	System Informa-tion	0x0110	Accumulated run time unit	R	N			
	System Informa-tion	0x0111	Total run time value	R	N			
	System Informa-tion	0x0112	Total run time unit	R	N			
	System Informa-tion	0x0113	Accumulated volume value	R	N			

Type	Function	Address	Register Name	Read/ Write	Storage	Default	Description	Note
System Information	System Informa-tion	0x0114	Accumulate d volume unit	R	N			
	System Informa-tion	0x0115	Accumulated run cycles (higher word)	R	N			
	System Informa-tion	0x0116	Accumulated run cycles (lower word)	R	N			
	System Informa-tion	0x0117	Sensor feedback flow rate value	R	N			When flow rate sensor is connected.
	System Informa-tion	0x0118	Sensor feedback flow rate unit	R	N			

7.2 Run Parameters

Type	Func tion	Register Address	Register Name	Description	Continuous Mode - Speed control	Continuous Mode - Flow rate control	Time Mode - Speed control	Time Mode - Flow rate control	Volume Mode - CF Series	Volume Mode - GD Series
Run Parameter	Parameter	0x0060	Start/Stop							
		0x0061	Run direction							
		0x0062	Operation mode	1 - Continuous mode, speed control 2 - Continuous mode, flow rate control 3 - Time mode, speed control 4 - Time mode, flow rate control 5 - Volume mode	1	2	3	4	5	5
		0x0063	Run parameter 1		Run speed value	Pump head index	Run speed value	Pump head index	Pump head index	Recipe number: (1 to 100)

Type	Func tion	Register Address	Register Name	Description	Continuous Mode - Speed control	Continuous Mode - Flow rate control	Time Mode - Speed control	Time Mode - Flow rate control	Volume Mode - CF Series	Volume Mode - GD Series
Run Parameter	Parameter	0x0064	Run parameter 2		Run speed unit	Tubing index	Run speed unit	Tubing index	Tubing index	Pump head index
		0x0065	Run parameter 3		Antidrip angle	Flow rate value	Run time value	Flow rate value	Flow rate value	Tubing index
		0x0066	Run parameter 4		Schedule run - hour	Flow rate unit	Run time unit	Flow rate unit	Flow rate unit	Flow rate value
		0x0067	Run parameter 5		Schedule run - minute	Antidrip angle	Interval time value	Run time value	Target volume value	Flow rate unit
		0x0068	Run parameter 6		Schedule run - second	Schedule run - hour	Interval time unit	Run time unit	Target volume unit	Target volume value
		0x0069	Run parameter 7			Schedule run - minute	Antidrip angle	Interval time value	Antidrip angle	Target volume unit
		0x006A	Run parameter 8			Schedule run - second	Total runs	Interval time unit		Fluid density value
		0x006B	Run parameter 9				Sched-ule run - hour	Antid-rip angle		Fluid density unit
		0x006C	Run parameter 10				Sched-ule run-minute	Total runs		Run time value
		0x006D	Run parameter 11				Sched-ule run-second	Sched-ule run - hour		Run time unit
		0x006E	Run parameter 12					Sched-ule run-minute		Interval time value
		0x006F	Run parameter 13					Sched-ule run-second		Interval time unit
		0x0070	Run parameter 14							Antidrip pre delay time value

Type	Function	Register Address	Register Name	Description	Continuous Mode - Speed control	Continuous Mode - Flow rate control	Time Mode - Speed control	Time Mode - Flow rate control	Volume Mode - CF Series	Volume Mode - GD Series
Run Parameter	Parameter	0x0071	Run parameter 15							Antidrip pre delay time unit
		0x0072	Run parameter 16							Antidrip angle
		0x0073	Run parameter 17							Total runs
		0x0074	Run parameter 18							Schedule run - hour
		0x0075	Run parameter 19							Schedule run - minute
		0x0076	Run parameter 20							Schedule run - second
		0x0077	Run parameter 21							Fluid name
		0x0078	Run parameter 22							Fluid name
		0x0079	Run parameter 23							Fluid name
		0x007A	Run parameter 24							Fluid name
		0x007B	Run parameter 25							Fluid name
		0x007C	Run parameter 26							Fluid name
		0x007D	Run parameter 27							Recipe name

Type	Function	Register Address	Register Name	Description	Continuous Mode - Speed control	Continuous Mode - Flow rate control	Time Mode - Speed control	Time Mode - Flow rate control	Volume Mode - CF Series	Volume Mode - GD Series
Run Parameter	Parameter	0x007E	Run parameter 28							Recipe name
		0x007F	Run parameter 29							Recipe name
		0x0080	Run parameter 30							Recipe name
		0x0081	Run parameter 31							Recipe name
		0x0082	Run parameter 32							Recipe name

7.3 Unit register conversion table

The standard unit value is 100, or 200 and 300 for flow rate unit.

	Register Value	Unit	Factor
Volume Unit	91	fL	10^{-9}
	92	0.01pL	10^{-8}
	93	0.1pL	10^{-7}
	94	pL	10^{-6}
	95	0.01nL	10^{-5}
	96	0.1nL	10^{-4}
	97	nL	10^{-3}
	98	0.01μL	10^{-2}
	99	0.1μL	10^{-1}
	100	μL	1
	101	10μL	10^{+1}
	102	100μL	10^{+2}
	103	mL	10^{+3}
	104	10mL	10^{+4}
	105	100mL	10^{+5}
	106	L	10^{+6}

	Register Value	Unit	Factor
Weight Unit	97	μg	10^{-3}
	98	0.01mg	10^{-2}
	99	0.1mg	10^{-1}
	100	mg	1
	101	10mg	10^{+1}
	102	100mg	10^{+2}
	103	g	10^{+3}
	104	10g	10^{+4}
	105	100g	10^{+5}
	106	kg	10^{+6}

	Register Value	Unit	Factor	Register Value	Unit	Factor	Register Value	Unit	Factor
Flow Rate Unit	91	fL/min	10^{-9}	191	fL/s	10^{-9}	291	fL/h	10^{-9}
	92	10fL/min	10^{-8}	192	10fL/s	10^{-8}	292	10fL/h	10^{-8}
	93	100fL/min	10^{-7}	193	100fL/s	10^{-7}	293	100fL/h	10^{-7}
	94	pL/min	10^{-6}	194	pL/s	10^{-6}	294	pL/h	10^{-6}
	95	10pL/min	10^{-5}	195	10pL/s	10^{-5}	295	10pL/h	10^{-5}
	96	100pL/min	10^{-4}	196	100pL/s	10^{-4}	296	100pL/h	10^{-4}
	97	nL/min	10^{-3}	197	nL/s	10^{-3}	297	nL/h	10^{-3}
	98	10nL/min	10^{-2}	198	10nL/s	10^{-2}	298	10nL/h	10^{-2}
	99	100nL/min	10^{-1}	199	100nL/s	10^{-1}	299	100nL/h	10^{-1}
	100	μL/min	1	200	μL/s	1	300	μL/h	1
	101	10μL/min	10^{+1}	201	10μL/s	10^{+1}	301	10μL/h	10^{+1}
	102	100μL/min	10^{+2}	202	100μL/s	10^{+2}	302	100μL/h	10^{+2}
	103	mL/min	10^{+3}	203	mL/s	10^{+3}	303	mL/h	10^{+3}
	104	10mL/min	10^{+4}	204	10mL/s	10^{+4}	304	10mL/h	10^{+4}
	105	100mL/min	10^{+5}	205	100mL/s	10^{+5}	305	100mL/h	10^{+5}
	106	L/min	10^{+6}	206	L/s	10^{+6}	306	L/h	10^{+6}

	Register Value	Unit	Factor
Speed Unit	96	0.0001rpm	10^{-4}
	97	0.001rpm	10^{-3}
	98	0.01rpm	10^{-2}
	99	0.1rpm	10^{-1}
	100	rpm	1
	101	10rpm	10^{+1}
	102	100rpm	10^{+2}

	Register Value	Unit	Factor
Run Time Unit	97	millisecond	10^{-3}
	98	0.01second	10^{-2}
	99	0.1second	10^{-1}
	100	second	1
	101	0.1minute	6
	102	minute	60
	103	0.1hour	360
	104	hour	3600

	Register Value	Unit	Factor
Length Unit	97	μm	10^{-3}
	98	0.01mm	10^{-2}
	99	0.1mm	10^{-1}
	100	mm	1
	101	cm	10^{+1}

	Register Value	Unit	Factor
Density Uniti	94	$10^{-6}mm^2$	10^{-6}
	95	$10^{-5}mm^2$	10^{-5}
	96	$10^{-4}mm^2$	10^{-4}
	97	$10^{-3}mm^2$	10^{-3}
	98	$0.01mm^2$	10^{-2}
	99	$0.1mm^2$	10^{-1}
	100	mm^2	1

	Register Value	Unit	Factor
Density unit	96	10^{-4}g/mL	10^{-4}
	97	10^{-3}g/mL	10^{-3}
	98	0.01g/mL	10^{-2}
	99	0.1g/mL	10^{-1}
	100	g/mL	1
	101	10g/mL	10
	102	100g/mL	100

7.4 Pump head & tubing index

7.4.1 Pump head index

Pump head selection	Index value	Note
YZ1515x	1	
YZII15	2	
YZ15-13X	3	
YZ1515x(6)	4	
YZ2515x	5	
YZII25	6	
YZ25-13X	7	
FG15-13	8	
FG25-13	9	
DMD15-13	10	
DG15-24	11	2 channels, 4 rollers
DG(6)	12	Channel X; below 100 rpm
DG(10)	13	Channel X; below 100 rpm
DG15-28	14	8 rollers; below 100 rpm
PFH01	15	Below 350 rpm
PFH02	16	Below 450rpm
DG15-48	17	8 roller; below 100 rpm
KZ25	18	

7.4.2 Tubing index

Pump head selection	Tubing	Index value
YZ1515X YZII15 YZ15-13X YZ1515X(6)	13#	1
	14#	2
	19#	3
	16#	4
	25#	5
	17#	6
	18#	7
YZ2515X	15#	1
	24#	2
YZII25 YZ25-13X	15#	1
	24#	2
	35#	3
	36#	4
FG25-13	15#	1
	24#	2
FG15-13	13#	1
	14#	2
	19#	3
	16#	4
	25#	5
	17#	6
	18#	7
DMD15-13	2x13#	1
	2x14#	2
	2x19#	3
	2x16#	4
	2x25#	5

Pump head selection	Tubing	Index value
DG15-24	16#	1
	25#	2
	17#	3
DG(6) DG(10)	0.5X0.8	1
	1X1	2
	2X1	3
	2.4X0.8	4
	3X1	5
	0.13X0.91	6
	0.25X0.91	7
	0.38X0.91	8
	0.76X0.86	9
	1.02X0.86	10
	1.27X0.86	11
	1.52X0.86	12
	1.65X0.86	13
	2.06X0.86	14
	2.54X0.86	15
	2.79X0.86	16
	3.17X0.86	17
PFH01	PFH01-05G	1
	PFH01-08G	2
	PFH01-12G	3
	PFH01-16G	4
	PFH01-24G	5
	PFH01-32G	6

Pump head selection	Tubing	Index value
PFH02	PFH02-06G	1
	PFH02-08G	2
	PFH02-12G	3
	PFH02-16G	4
	PFH02-24G	5
	PFH02-32G	6
	PFH02-48G	7
KZ25	15#	1
	24#	2
	35#	3
	36#	4
DG15-X8	13#	1
	14#	2
	0.5X0.8	3
	1X1	4
	2X1	5
	2.4X0.8	6
	3X1	7
	0.13X0.91	8
	0.25X0.91	9
	0.38X0.91	10
	0.76X0.86	11
	1.02X0.86	12
	1.27X0.86	13
	1.52X0.86	14
	1.65X0.86	15
	2.06X0.86	16
	2.54X0.86	17
	2.79X0.86	18
	3.17X0.86	19

8. Common Error Messages and Handling

- Motor stalling: When motor stalling error occurs, check and solve the problem. Once the fault is eliminated, the operation can be restarted.
- Device Fault: When device fault occurs, please consult after-sales service for feedback.
- Parameter Exceeded Limit: Input and set parameter based on the parameter range prompt.

9. Default Parameters

	Parameter Name	Default	GD200-1B/C	GD400-B	GD650-B
Continuous Mode	Pump head	YZ1515X			
	Tubing	17#			
	Control parameter	Speed mode			
	Flow rate value		533.3	1067	1733
	Flow rate unit		mL/min	mL/min	mL/min
	Speed value		200	400	650
	Speed unit		rpm	rpm	rpm
	Anti-drip	0			
	Calibration coefficient	1			
Time Mode	Pump head	YZ1515X			
	Tubing	17#			
	Control parameter	Speed mode			
	Flow rate value		533.3	1067	1733
	Flow rate unit		mL/min	mL/min	mL/min

	Parameter Name	Default	GD200-1B/C	GD400-B	GD650-B
Time Mode	Speed value		200	400	650
	Speed unit		rpm	rpm	rpm
	Anti-drip	0			
	Calibration coefficient	1			
	Run time value	60			
	Run time unit	sec			
	Interval time value	3			
	Interval time unit	sec			
	Dispense count	1			
Volume Mode	Method name	METH_1			
	Pump head	YZ1515X			
	Tubing	17#			
	Volume value	533.3			
	Volume unit	mL			
	Flow rate value	533.3			
	Flow rate unit	mL/min			
	Dispense time value	60			
	Dispense time unit	sec			
	Interval time value	3			
	Interval time unit	sec			
	Dispense times	1			
	Anti-drip pre delay value	0			
	Anti-drip pre delay unit	sec			
	Anti-drip	0			
	Calibration coefficient	1			
	Calibration percentage	100%			
	Fluid name	WATER			
	Fluid density	1g/mL			
System Parameter	Start/Stop control source	Local			
	Running direction control source	Local			

	Parameter Name	Default	GD200-1B/C	GD400-B	GD650-B
System Parameter	Speed control source	Local			
	Parameter control source	Local			
	Scheduled time	5sec			
	Communication enable	Disable			
	Communication protocol	Modbus RTU			
	Device address	1			
	Baud rate	115200			
	Parity	None			
	Work mode	Continuous mode			
	Method name	1			
	Start/Stop signal	Low level			
	Running direction signal	Low level			
	Analog signal type	4-20mA			
	Maximum speed		200	400	650
	Minimum speed	0			
	Maximum value of analog current signal	20mA			
	Minimum value of analog current signal	4mA			
	Maximum value of 5V analog signal	5V			
	Minimum value of 5V analog signal	0V			
	Maximum value of 10V analog signal	10V			
	Minimum value of 10V analog signal	0V			
	Maximum value of frequency signal	10000Hz			
	Maximum value of frequency signal	0Hz			
	Flow sensor enable	Disable			
	Flow sensor calibration enable	Disable			
	Maximum value of current signal	20mA			
	Minimum value of current signal	4mA			
	Maximum flow rate	10mL/min			
	Minimum flow rate	0mL/min			
	Foot switch enable	Disable			

	Parameter Name	Default	GD200-1B/C	GD400-B	GD650-B
System Parameter	Foot switch signal	Step on run			
	Voice enable	Disable			
	Voice address	1			
	Voice of direction switch enable	Disable			
	Key click	Enable			
	Run completion	Disable			
	Imminent completion	Disable			
	Time to completion	5sec			
	Device fault alarm	Disable			
	Filling speed		200	400	650
	Start-up state	Disable			
	Screen brightness	100%			
	User access management - login	Disable			

10. Precautions

10.1 Operating Environment

Please use this product within the specified environmental conditions:

- This product is only suitable for indoor use, with the altitude less than 2000 meters and a pollution degree not higher than level 2.
- Operating temperature range: 0 - 40°C.
- Operating relative humidity: Maximum 80% RH, non-condensing.
- Transportation and storage temperature range: -10 - 55°C.
- Transportation and storage relative humidity: Max. 80% RH

10.2 Equipment Wiping

If the device needs wiping, please notice the following operations:

- Please turn off the power supply to ensure your safety.
- Please use a towel moistened with a neutral reagent to wipe the device housing. Be careful to avoid the power socket and other external control interfaces, and do not allow water to drip into the device.

10.3 Emergency Replacement of Accessories

Please use the relevant accessories provided by Longer Pump as much as possible. If it is necessary to replace key accessories, please consult after-sales service and replace them with accessories of the same specifications.

If the power cord or fuse is damaged or lost, please replace them according to the table below in an emergency situation.

Index	Name	Specification	Remark
1	Fuse	T2A 250V	
2	Power cord	10A 250V	3-core, 0.75mm^2 pure copper wire